SkyAzúl
EQUIPMENT SOLUTIONS

Trimble / LSI
GM820 – Volvo
With GS820 Display and Wireless Sensors

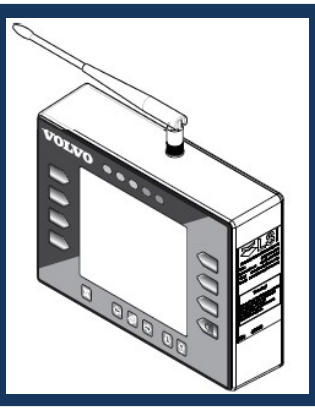

Installation and Service Manual

NOTICE

SkyAzúl makes no warranty of any kind with regard to this material, including, but not limited to, the implied warranties of merchantability and/or its fitness for a particular purpose.

SkyAzúl will not be liable for errors contained in this manual or for incidental or consequential damages in connection with the furnishing, performance, or use of this manual. This document contains proprietary information, which is protected by copyright, and all rights are reserved.

No part of this document may be photocopied, reproduced, or translated to another language without the prior written consent of SkyAzúl.

SkyAzúl reserves proprietary rights to all drawings, photos and the data contained therein. The drawings, photos and data are confidential and cannot be used or reproduced without the written consent of SkyAzúl. The drawings and/or photos are subject to technical modification without prior notice.

All information in this document is subject to change without notice.

SkyAzúl, Inc.
16 Walnut Street
Middletown, MD 21769
Fax 301-371-0029
info@skyazul.com

1. LOAD MANAGEMENT SYSTEM (LMS) OVERVIEW

1.1 LMS Display

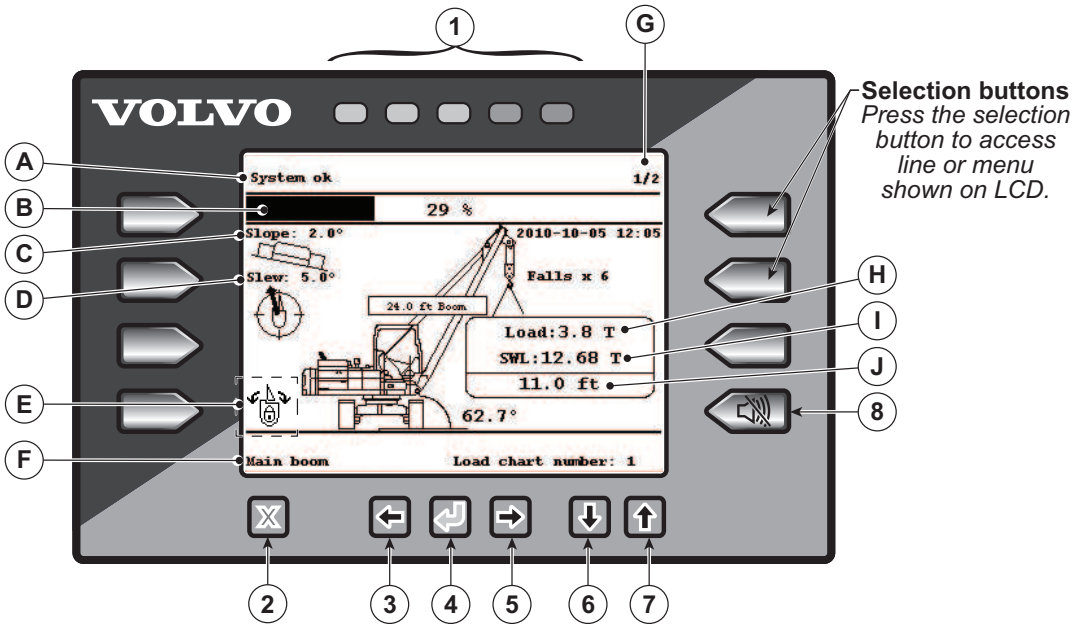

1- **Bargraph**: Percentage of capacity

The bargraph and the external boom lightbar are activated based on the following percentage of SWL (Safe Working Load):

0% - 29% of SWL:. . . . . Green light №1 ON
30% - 59% of SWL:. . . . . Green light №2 ON
60% - 84% of SWL:. . . . . Green light №3 ON
85% - 99% of SWL:. . . . . Amber light ON
Above 100% of SWL: . . . . . Red light ON

***Special Condition**: when a sensor is missing all lights (green, amber, and red) are "ON".*

2- **Exit button**

3- **Back**: Move to the previous page/digit.

4- **Menu / enter**: Access the system menus / confirm changes to system settings.

5- **Next**: Move to next page/digit.

6- **Down**: Modify numeric values and move down through a list of choices.

7- **Up**: Modify numeric values and move up through a list of choices.

8- **Mute alarm**

A- Message area: messages, warnings and alerts are displayed in this area.

B- Bargraph: percentage of the maximum permitted load. Warning begins at 85%, alarm at 100% and function lockout at 110%.

C- Slope indicator: show the pipelayer level.

D- Slew indicator: the arrow points toward the uphill direction. The quadrant refers to the pipelayer upper body position. The left side of the quadrant represents the left direction as seen from the operator cab's seat.

E- Engage slew lock symbol: engage the slew lock function when this symbol is present. The swing motor may not be strong enough to prevent the machine from swinging downhill when lifting a load.

F- Load chart area: presents the currently selected load chart. To change load chart, access menu #2-"pipelayer rigging".

G- Page number. Press the Next button to access the next page.

H- Current load on hook

I- Safe Working Load: maximum load allowed in this machine configuration, with the currently selected load chart.

J- Working distance

2. INSTALLATION

2.1 Wiring and intallation

Simply connect the LMS cable harness to the cabin mating harness.

Connector Pin No.	Wire identification	Function
1	1	Positive power supply
2	2	Positive power supply
3	3	Negative (ground)
4	4	Negative (ground)
5	5	Motion cut 1
6	6	Motion cut 2
7	7	Mute Buzzer* - joystick input*
8	8	Machine in rigging mode input
9	9	Light bar signal 1
10	10	Light bar signal 2
11	11	Light bar signal 3
12	Green/Yellow	Spare input/output

Table: Power and Input/Output Connections

*only on selected machines

External light bar	Control wires	Pin
Green #1	Light bar signal 1	9
Green #1&2	Light bar signal 2	10
Green #1,2&3	Light bar signal 3	11
All greens + amber	Light bar signals 1&2	9+10
All 5 lights	Light bar signals 2&3	10+11

Table: External light bar control

Motion cut 1: Locks boom down & winch up: engage in case of overload and anti-two-block alarms

Motion cut 2: Free switch cut: engage in case of slope alarm

Wire harness and lockout functions

Warning, alarm and lockout control is programmed in the Lockout settings menu. The LMS is programmed to generate alarms and lockouts for some programmed limits and anti-two-block alarms.

Warning level. When gross load (regardless of tare value) approaches the maximum limit for a load sensor, an intermittent warning message is generated on the LCD. The maximum limit for a load sensor is the lower of; a) the operator set limit (Limit Menu), and b) the working load limit (WLL) if rated capacity charts are used. The default proportions of a limit that must be reached to activate an external light or a light on the LMS are available in the Lockout settings menu. The menu is shown below:

4L) Lockout settings menu

1) Green lamp-1 level (%)	0.0%
2) Green lamp-2 level (%)	30.0%
3) Green lamp-3 level (%)	60.0%
4) Amber lamp level (%)	85.0%
5) Red lamp level (%)	100.0%
6) Lockout level (%)	110.0%
7) A2B and Overload trigger	00000136
8) Free swing cut trigger	16777216
9) Mute Input	00000000
10) Rigg mode Input	00000000
11) Optional trigger	00000000
12) Lockout relay inverted	no
13) A2B Filter Delay	08

To access this menu,

1. Go to menu ***4L) Lockout Settings***.
2. Enter the user password 'aza' (using ***Back***, ***Next***, ***Up*** and ***Down*** as described in ***Password settings*** section) and press ***Enter***.

Alarm (Red Lamp) level. All programmed and rated capacity limits and two-block will generate an audible alarm when the alarm level is reached. Alarms will generate an intermittent alarm message on the LCD.

Lockout level (motion cut). The lockout wires are powered in safe condition. Disconnecting the LMS will then remove power on the lockouts wires and lock the pipelayer functions.

By default the lockout wires carry pipelayer power supply voltage as long as the display is in safe condition (to inverse lockout polarity for all the wires, see menu ***4L) 12) Lockout relay inverted***). When a lockout level is reached voltage is cut on all lockout wires linked to the lockout condition. The proportion of a limit that must be reached to trigger lockout is the lockout level. The default factory setting for the lockout level is 110%.

Display language selection

The display is multi-language. Access menu #3 to change the currently active language. Depending on the installed language pack, the list of available languages will be different. The installed language pack could be verified in menu #8.

Part number	List of languages available
B0211_V#-S000*	English, French, Portuguese, Spanish
B0211_V#-S001	English, Netherland, German, Italian
B0211_V#-S002	English, Russian
B0211_V#-S003	English, Chinese
B0211_V#-S004	English, Turkish

*default language pack

The language packs are available for download from "*www.load-systems.com/VolvoAccess*". As of February 2012, the following file is available: "*B0211_V1012-Sxxx.zip*". It contains all the language packs mentioned above.

Example: if a system with the default language pack must be switched to Chinese:
1) Download the language packs if it has not been downloaded yet.
2) Extract the files inside the zip file.
3) Copy the language pack containing the Chinese language on a USB flash** memory. Ex: "*B0211_V1012-S003.820*".
4) Insert the USB flash memory in the display.
5) A menu should appear on screen, select the language pack file.
6) Once programed, access the menu #3 and change the language to Chinese.

** USB Flash memory": use a simple USB flash device. The complex ones with MP3 players, or others creating more than one logical disk on a computer may not work properly with the display.

2.2 Wireless Load Pins

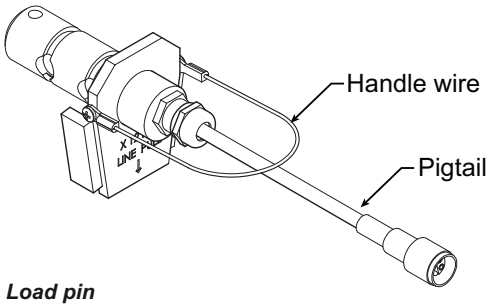

Figure: Load pin

IMPORTANT! **Do not pull on a load pin by the pigtail, pull on the handle wire.**

Mounting

1. Mount the load pin to the boom tip or block by replacing the pin of the wedge socket. The load pin is directional and must be oriented correctly to indicate load accurately. Install the pin so that the bracket embraces the wedge socket and prevents pin rotation.

Note: When installed at the boom tip the lot number can be read right side up and the "line pull" arrow points down towards the block. When installed at the hook ball or block, the lot number can be read upside down and the "line pull" arrow points up towards the boom tip.

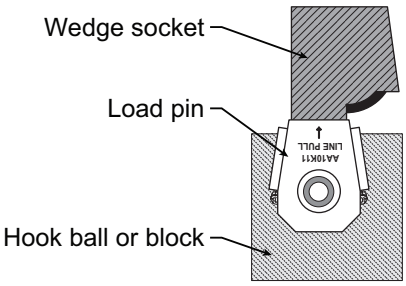

Figure: Load pin - Installation on a single part block

2. Secure the load pin in place with a cotter pin or other suitable keeper device.

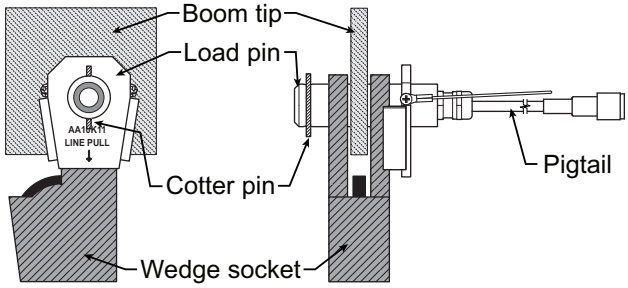

Figure: Load pin - Installation at boom tip

2.2a Load Pin and anti-two-block Transmitter GS009

1. Determine the transmitter mounting position.
   a. The pigtails to the load pin and the other one to the anti-two-block must connect easily without stretching or kinking at all boom angles and working conditions.
   b. The best radio communication is obtained when there is a direct unobstructed line of sight from the transmitter to the display.
   c. The transmitter antenna must not be in contact with any metal object.
   d. The transmitter antenna should point to the left of the boom when viewed from the cab; it should not point directly to, or away from, the display.

IMPORTANT! **Do not weld in proximity to sensor/transmitters.**

2. Weld the mounting blocks where required.
3. Mount the load pin transmitter on the mounting blocks.

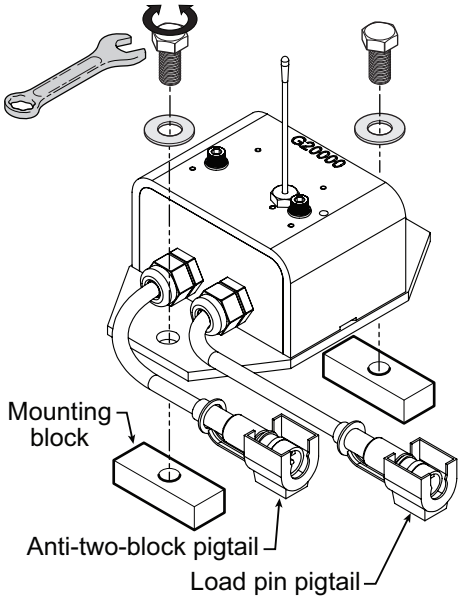

Figure: the load pin and anti-two-block transmitter GS009

2.3 Anti-Two-Block Switch

Verify the anti-two-block switch is programmed in the LMS display. Switches shipped with displays are pre-programmed in the factory. *Test: if the switch has been programmed to the display then the display will go into two-block alarm when the switch is released*. Press ***Mute*** to silence the alarm until the next two-block event or simulation. If the switch has not been programmed to the display, this should be done before proceeding with installation. See the section ***How to Add a Sensor to the LMS***.

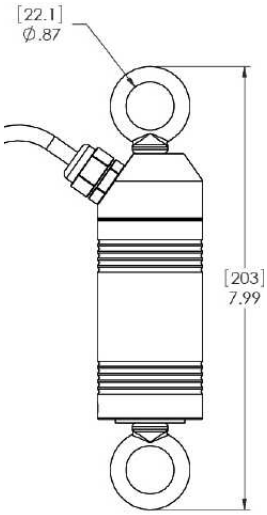

Figure: Anti-two-block switch

2.3a Switch Bracket Installation

Install the LS051 on the pipelayer boom near the tip with a threaded chain connector. Install a weight and chain assembly to the bottom eye bolt. The maximum total weight of the weight and chain assembly supported by the LS051 anti-two-block switch is 20 lb.

2.3b Chain length adjustment

1. Chain length adjustment № 1 – minimum boom angle
   a. At minimum boom angle, with no additional weight on the hook block and one part of line only, lift the boom just enough to have the hook block suspend and clear the sensor chain and weight.
   b. Hoist slowly until the buzzer sounds. Note the hoisting distance remaining; this distance must be great enough to allow the operator and the lockout system, if installed, to prevent a two-block event. If necessary, add chain between the sensor and weight to increase warning distance. If still insufficient, contact your service representative.
2. Chain length adjustment № 2- maximum boom angle
   a. Raise the boom to the maximum angle.
   b. Hoist slowly as described in ***Step 1.b***. Verify that the warning distance is equal to or greater than that determined at the minimum boom angle.
3. Chain length adjustment № 3 – speed test: Lower the boom until the weight height becomes visually clear to the operator. Repeatedly create two-block, progressively hoisting faster, to ensure that the warning and lockout work within acceptable amount of time and distance. Increase the length of the chain if needed.

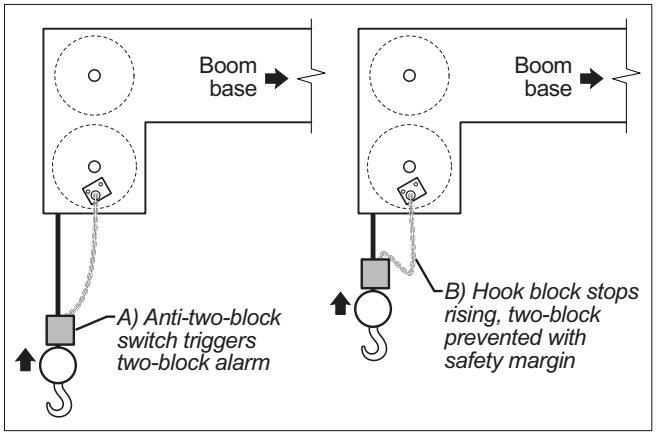

Figure: Chain length test at minimum angle

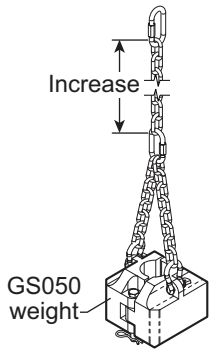

Figure: Chain length adjustment

IMPORTANT!
To increase chain length, only use lightweight chain.

2.4 Angle Sensors

IMPORTANT! Keep the angle sensor away from the boom and any connecting metal structures when welding the metal lugs to the boom. Proximity to welding may cause permanent damage to the angle sensor and prevent accurate angle indication.

Mounting Procedure

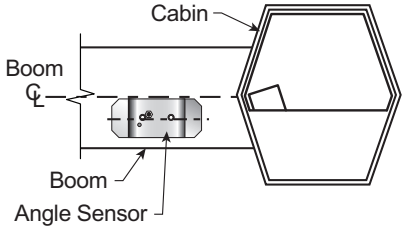

Figure: Angle sensor level with the boom (typical installation) - Side View

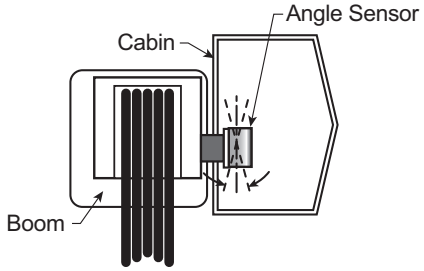

Figure: Angle sensor top/bottom axis within 15° of vertical (typical installation) - Front View

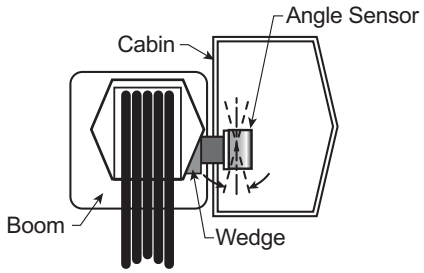

Figure: Wedge used to mount the angle sensor with its top/bottom axis within 15° of vertical (typical installation) - Front View

The GS010 series angle sensors can be turned on by starting up the LMS display to which they are programmed. The angle sensor can then assist in levelling itself with the red and green LED.

1. Determine the angle sensor position.
   a. The GS010-01 boom angle sensor can be mounted on either side of the boom.
   b. The GS010-02 360° angle sensor must be mounted on the port side of the jib.
   c. The angle sensor must be level with the boom or jib centerline.
   d. The top / bottom axis of the angle sensor must be within 15 degrees of vertical
   e. The angle sensor should have a clear line of sight to the cabin mounted display.
   f. The angle sensor antenna should not contact a metal object.

WARNING! The angle reading may be affected by vibration and may fluctuate; the angle sensor should not be installed in close proximity to a high RPM electric motor or other source of high frequency vibration.

2. Install the welding pads; keep the angle sensor at least three feet from the weld site and any connecting metal objects while welding.
3. Mount the angle sensor to the weld pads with the screws and washers provided.
4. Verify angle indication on the LMS LCD.

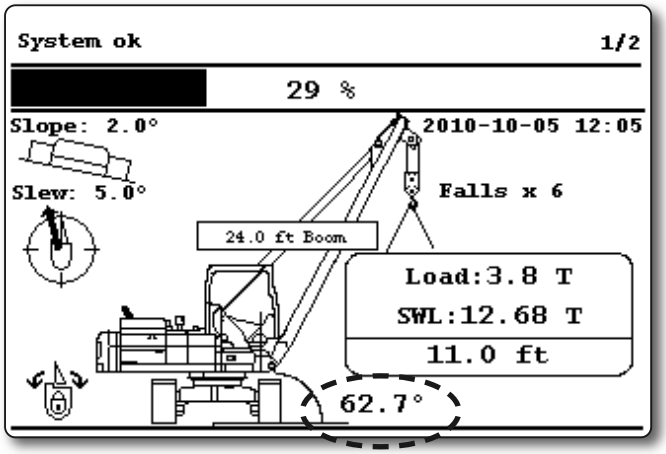

Figure: Typical operation page with boom angle indication

5. If the angle displayed by a GS010-01 boom angle sensor is a high negative value, then tilt the angle sensor up over 45 degrees, and then tilt back down to horizontal. The GS010-01 boom angle sensor will automatically detect on which side of the boom it is installed and correct angle indication accordingly.

2.4a Angle Calibration Procedure № 1: Mechanical Set-Up

1. Level the boom such that it is perfectly horizontal; use a high quality bubble or digital angle sensor. If the LMS display indicates 0.0 degrees then angle calibration is complete; if not then continue to step 2.

WARNING! Failure to ensure the boom is levelled will result in false reading of the pipelayer's radius hence the risk of structural failure of the pipelayer or pipelayer tipping over.

2. Loosen the mounting screw in the slotted hole of the angle sensor mounting plate.

3 Pivot the angle sensor slightly until angle indication is correct. Repeat the angle validation (step 1) as required.

2.4b Angle Calibration Procedure № 2: Correct with the LMS

*Note: When the angle sensor is moved very slowly, it may take several seconds to see an update at the LMS display. Instead move the sensor up a couple of degrees, and then bring it back down to where it should be. The small light on the angle sensor flashes when it transmits a new value to the display. To set the angle sensor to transmit continuously for 5 min., go to menu **4B1) Automatic Calibration** and select the angle sensor.*

Calibrate angle indication by adjusting the trim (offset) value in the LMS display; the LMS will then communicate the updated trim value to the sensor.

1. Position the boom at a precisely known angle.
2. Go to menu ***4)*** and select ***4B) Sensor Calibration***.
3. Enter the user password and press ***Enter***.
4. Select ***4B2) Manual Parameter Adjustment***.
5. Use ***Up*** and ***Down*** to select the angle sensor to be calibrated and press ***Enter***.
6. Select ***2) Trim:*** and press ***Enter*** to modify.
7. Use ***Up*** and ***Down*** to modify the trim value.

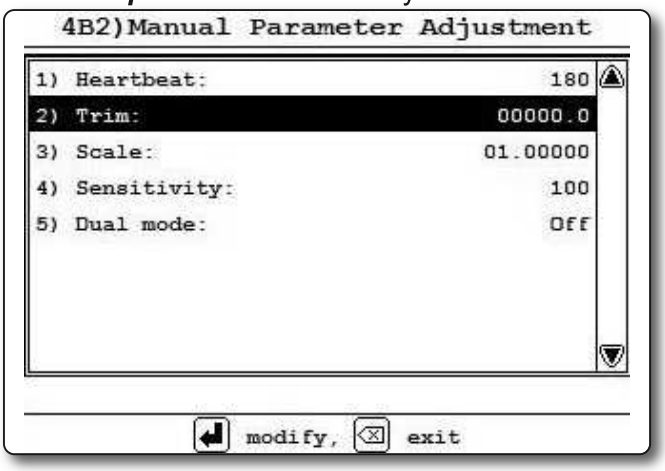

Figure: Angle Calibration Procedure № 2

Example: If angle indicated is 0.3° over the actual angle, adjust the trim value to -0.3.

Example: If angle indicated is 0.9° below the actual angle, adjust the trim value to 0.9.

8. Press ***Enter*** to save changes.
9. Press ***Exit*** to return to the operation display.
10. Verify accurate angle indication at both very high and very low angles.

2.4c Radius Verification

1. Verify the boom angle accuracy. The radius is calculated from the boom angle. All radius parameters are pre-calibrated and should not need adjustements. For details on the radius adjustement, contact LSI technical support or consult the online generic GS820 manual on www.loadsystems.com.

2.5 Sensor List

All sensors in the LMS system are programmed in the sensor list. The LMS will not use or display information from sensors that are not programmed to the sensor list. If a sensor is replaced the sensor list must be updated with the new ID number.

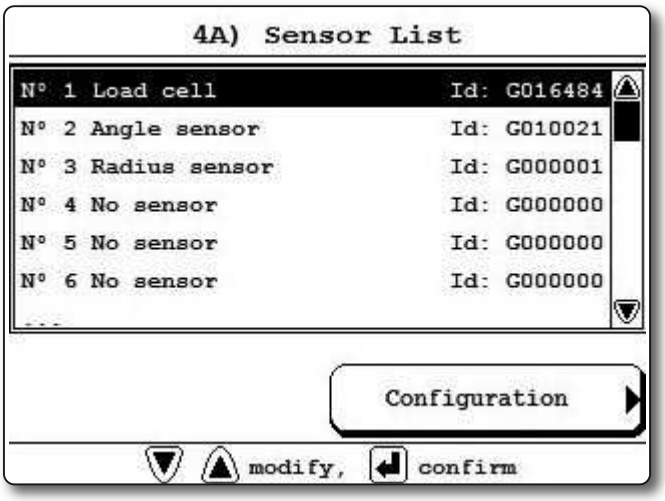

Figure: Menu 4A) - example of a sensor list

2.5a How to Add a Sensor to the LMS

1. Determine the radio identification number (ID) of the sensor to be added. This number between 10000 and 99999 is engraved on the sensor.
2. Go to menu ***4A)***.
3. Enter the user password 'aza' and press ***Enter***.
4. Advance to the next empty sensor position in the sensor list "***No sensor***". Up to 32 sensors may be added to the sensor list. Press ***Enter***.
5. Use ***Up*** and ***Down*** to select the sensor type and press ***Enter***.
6. Use ***Up*** and ***Down*** to program the sensor ID and press ***Enter***.
7. Press ***Enter*** to save any changes made to the sensor list.
8. Press ***Exit*** to return to the operation display.

2.5b How to Remove a Sensor from the LMS

1. Determine the sensor to be removed. If more than one sensor of the same type has been added to the sensor list then determine the radio identification number (ID) of the sensor to be removed before proceeding. This number between 10000 and 99999 is engraved on the sensor.
2. Go to menu ***4A)***.
3. Enter the user password 'aza' and press ***Enter***.
4. Select the sensor to be removed and press ***Enter*** to modify.
5. Use Up and Down to select "No sensor". This will remove the sensor from the sensor list but retain the sensor ID.

*Note: Press **Next** and **Back** simultaneously to remove the sensor from the sensor list. The ID number will revert to 0, and the sensor type will revert to "**No Sensor**".*

6. Press ***Enter*** to save any changes made to the sensor list.
7. Press ***Exit*** to return to the operation display.

Note: a radius sensor (virtual sensor) is required for the display to calculate the boom radius and access load charts.

IMPORTANT! **Information displayed from load, boom angle or trim and list sensors that are not correctly installed will not be accurate.**

IMPORTANT! **Rated capacity and radius based on information from angle not correctly installed will not be accurate.**

2.6 Load Pins: re-calibration

Load pins must be calibrated at installation and every time thereafter the installation, the load sensor or the load transmitter is changed.

This procedure requires two known weights. The first (light) weight should be about 10% of load sensor capacity. The second (heavy) weight should be over 50% of capacity, and absolutely not less than 25%.

Important: When entering the known weight values, be sure that the cable and all rigging weights are included in those values.

1. Go to menu ***4) Installation*** and select ***4B) Sensor Calibration***.
2. Enter the user password 'aza', press ***Enter*** and select ***4B1) Automatic Calibration Wizard***.
3. Use ***Up*** and ***Down*** to select the load sensor, and then press ***Enter*** to confirm communication with the sensor is possible and to start the wizard.
4. Use ***Up*** and ***Down*** to adjust the actual parts of line on the load sensor, and then press ***Enter*** to confirm.
5. Note the units that will be used during the calibration wizard, and then press ***Enter***.

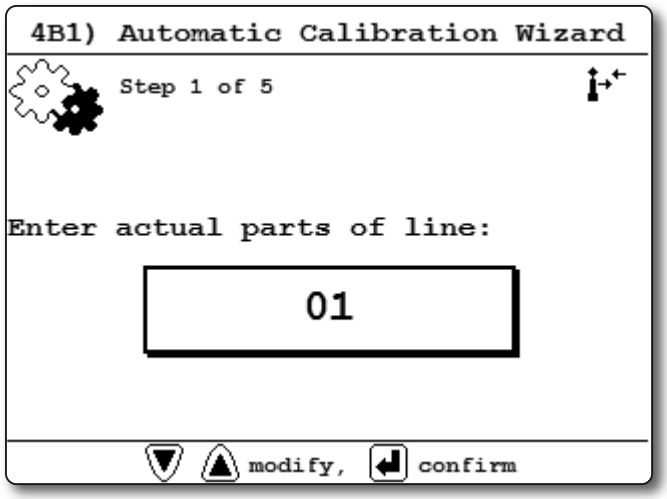

Figure: The automatic load calibration wizard, adjust the actual parts of line

6. Lift the first (lighter) known load, use ***Up*** and ***Down*** to adjust the load value displayed to equal the actual known load lifted, and then press ***Enter***.
7. Lower the first load, lift the second (heavier) known load, use ***Up*** and ***Down*** to adjust the load value displayed to equal the actual known load lifted, and then press ***Enter***.

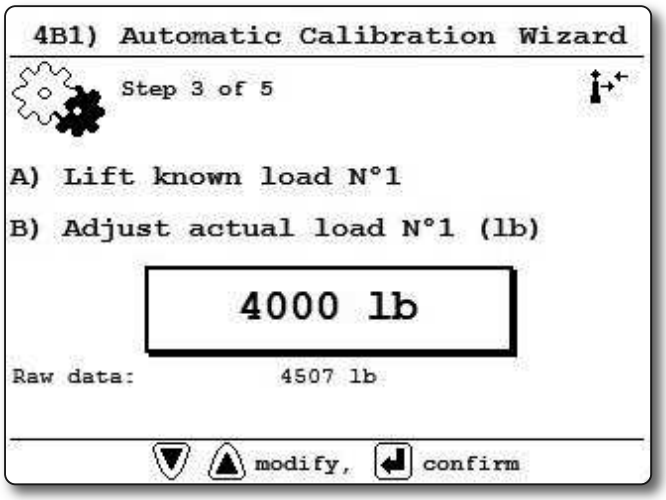

Figure: The automatic load calibration wizard, adjust the load

8. Note the new trim and scale values.

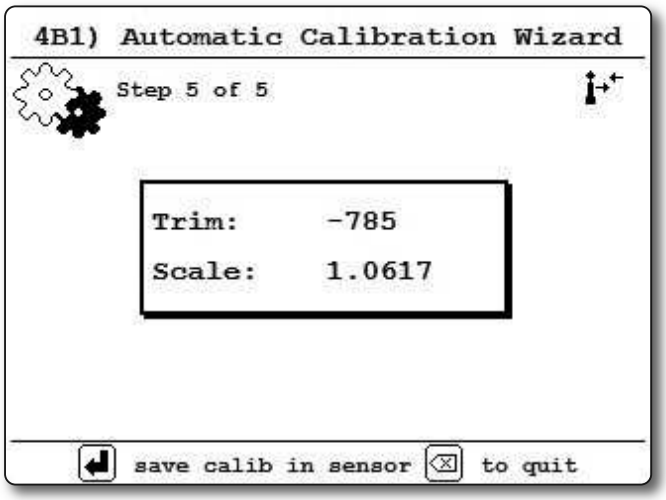

Figure: The automatic load calibration wizard, trim and scale values

9. Press ***Enter*** to send the new calibration to the load sensor.
10. Press ***Exit*** to return to the operation display.

2.7 List and Trim Angle Sensor

The list & trim angle sensor is installed on the machine upper body to measure the machine level in two axis. The two axis allow the system to calculate the ground slope and the slope direction. Those are then used to select the proper load capacity charts.

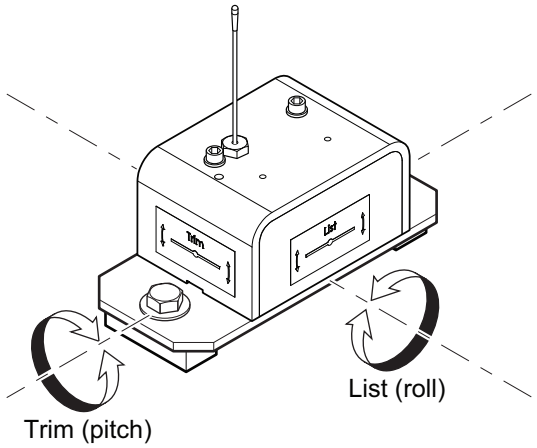

Figure: List and Trim axes

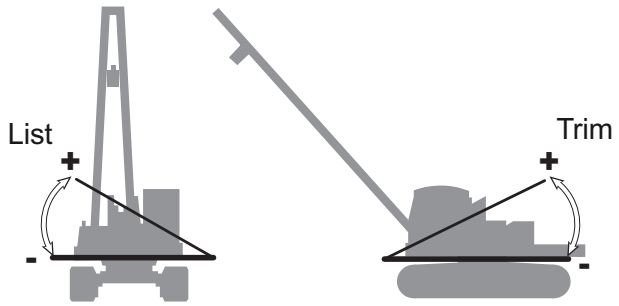

Figure: Verify that list & trim values changes as shown above

2.7a Mounting Instructions

1. The trim & list sensor must be installed on the machine upper body with the trim axis parallel to the centerline drawn through the boom hinge pins.
   - The list axis decal faces forwards (towards the boom tip when the boom angle is 0° to horizontal).
   - The trim axis decal faces to the right.
   - The sensor id number is on the top, horizontally, with the antenna pointing up.
   - The mounting surface should be flat and known to be level (0°) in both the list and trim axes.
2. Install the welding pads; keep the angle sensor well removed from the weld site and any connecting metal objects while welding.
3. Mount the angle sensor to the weld pads with the screws and washers provided.

IMPORTANT! **Remove the angle sensor from any connecting metal structures or surfaces when welding the metal lugs to the mounting surface. Proximity to welding may cause permanent damage to the angle sensor and prevent accurate angle indication.**

4. Verify list and trim angle indication in the operation display. They should change as shown in the picture.

For calibration, use one of the two procedures below.

Minimum and maximum limits for list and trim angle are user adjustable in the display limit menu. The display generates an alarm if the limits are exceeded.

2.7b Programming the LMS for List and Trim Indication

The LMS should already be programed with the list and trim sensors. If not, for list indication, add the sensor ID number to the sensor list (menu ***4A)***) and select the sensor type "*List sensor*".

For trim indication, add the GS010-03 ID number to the sensor list (menu ***4A)***) and select the sensor type "*Trim sensor*".

The maximum and minimum angles for list and trim indication can be adjusted in the limit menu. The default limits are 10.0° maximum and -10.0° minimum.

Calibration Procedure 1: mechanical

At installation, the sensor could be mechanically aligned to show 0 degrees on both axis when the pipelayer is level. Alternatively, the procedure #2 could be used.

Calibration Procedure 2: via the LMS

Calibrate angle indication by adjusting the offset values for list and trim in the LMS display; the LMS will then communicate the updated offset values to the sensor.

1. **Install the sensor at a precisely known list and trim angle (Ex: set the pipelayer perfectly level, both axis should show zero degrees).and trim angle.**
2. Go to menu ***4) Installation*** and select ***4B) Sensor Calibration***.
3. Enter the user password 'aza' and press ***Enter***.
4. Select ***4B1) Automatic Calibration Wizard***.
5. Use ***Up*** and ***Down*** to select the trim (or list) sensor.
6. Press ***Enter*** to go to the first step of the calibration wizard; note the uncorrected angle indicated.
7. Use ***Up*** and ***Down*** to adjust the angle value indicated until it is equal to the known angle.
7. Note the trim and scale values.
8. Press ***Enter*** to save and communicate changes to the sensor.
9. Repeat steps 4 through 8 for the list angle.
10. Press ***Exit*** to return to the operation display.
12. Verify accurate list and trim angle indication.

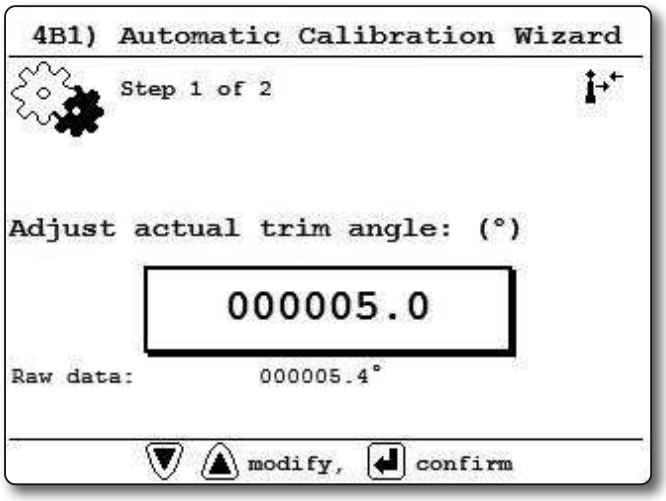

Figure: Trim Angle calibration, adjust the angle

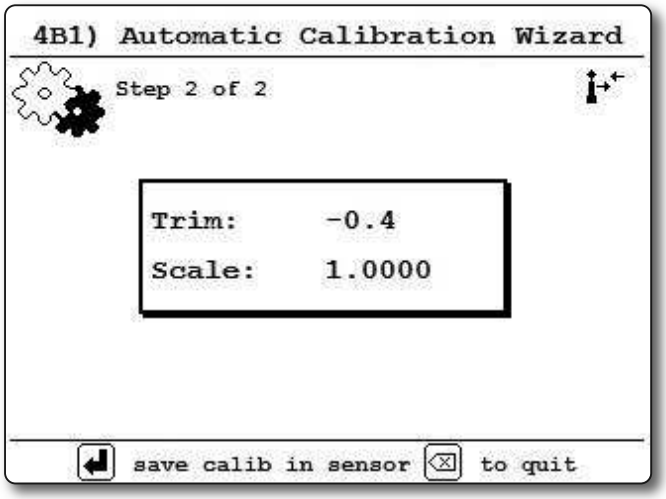

Figure: Trim Angle calibration, trim and scale values

2.10 Data Logger

The LMS includes a data logger that records all significant events including actual sensor values and a date and time stamp. The data logger memory can hold over 32 000 records, this is equivalent to several days or several years of operation depending on the recording mode selected and machine use. The data can be extracted using a USB mass storage device (USB key) and then transferred to a personal computer for analysis.

2.10a Recording Modes

Adjust the data logger recording mode as required:

1. Go to menu ***4)*** and select ***4K) DATA LOGGER***.
2. Enter the user password 'aza' and press ***Enter***.
3. Use ***Up*** and ***Down*** to select the data logger recording mode and press ***Enter***.
4. Press ***Enter*** to save any changes.
5. Press ***Exit*** to return to the operation display or press ***Down*** to adjust the data logger date and time (see *Date and Time* sub-section).

Note: all alerts are recorded by the data logger regardless of the mode selected.

Recording Modes description:

Alarm only. Record alarms only. All the other data logger modes also record alarms.

Automatic recording intervals. A record is added at a specified interval. When the automatic recording data logger mode is selected on menu ***4K) 1)*** (see step 3 above) select ***1A) MINUTES***, press ***Enter*** and then use ***Up*** and ***Down*** to adjust the record interval in minutes.

Automatic variation. A record is added when load increases by more than the operator adjusted percentage. When the automatic variation data logger mode is selected on menu ***4K) 1)*** (see step 3 above) select ***1A) VARIATION (%)***, press ***Enter*** and then use ***Up*** and ***Down*** to adjust the variation threshold.

Automatic peak. In the automatic peak mode the data logger analyzes the measured weight and records the peak value only. One threshold per load cell must be adjusted. When the weight drops by more than the peak threshold the peak weight is recorded. Only one event is recorded for each pick when the threshold is adjusted correctly. When the automatic peak data logger mode is selected on menu ***4K) 1)*** (see step 3 above) select ***1A) THRESHOLD №1***, press ***Enter*** and then use ***Up*** and ***Down*** to adjust the peak threshold for the first load cell. Press ***Down*** to repeat for the second load cell etc. Up to four load cells can be programmed for automatic peak data logging.

User input. The status of all sensors is recorded on demand. A normally open push button must be installed on a digital input to the LMS through a pre-determined wire of the power supply and lockout cable.

All data. All communications between a display and its sensors are recorded.

2.11b Date and Time

Adjust the data logger date and time as required:

1. Go to menu ***4)*** and select ***4K) DATA LOGGER***.
2. Enter the user password 'aza' and press ***Enter***.
3. Select ***2) DATE*** and press ***Enter***.
4. The digits of the year should be flashing: use ***Up*** and ***Down*** to adjust the year and press ***Next***.
5. Use ***Up*** and ***Down*** to adjust the month and press ***Next***.
6. Use ***Up*** and ***Down*** to adjust the day and press ***Enter*** to confirm.
7. Select ***3) TIME*** and press ***Enter*** to adjust the time.
8. The hour should be flashing: use ***Up*** and ***Down*** to adjust the hour from 00 (midnight) to 23 (11 pm).
9. Press ***Next*** to adjust the minute.
10. Use ***Up*** and ***Down*** to adjust the minute and press ***Next***.
11. Use ***Up*** and ***Down*** to adjust the second and press ***Enter*** to save any changes.
12. Press ***Exit*** to return to the operation display.

3.0 System Diagnostic

The first diagnostic step is to note the messages shown at the top of the main screen. Then, access menu 5F (Diagnostic, Current Alarms). This will list the different alarm conditions. If a sensor is in timeout or indicated as missing, its battery will likely need to be changed. See the procedure to change the battery and properly seal the transmitter box.

A problem with one sensor will often generate other alarms. For example, not knowing the boom angle may make the radius calculation to be longer than the actual and could select a load chart with minimal capacity.

Note the display ID number indicated on the right side of the display for eventual assistance from LSI.

Sensor list verification:

If a sensor is indicated as missing, or if a sensor has been replaced, the list of sensors programed in the LMS should be verified, along with the ID number of each sensor. See section 2.5 on how to access and modify the sensor list.

The pipelayer should have a specific list of sensors. For each one, verify that the ID number matches the number engraved on the actual sensor. As indicated in the table below, some transmitters could send two signals and will then have teh same ID. It is the case for the load and anti-two-block (A2B), and for the trim & list angles.

Sensor number	Sensor type	Note
1	Load	Load sensor
2	Angle	Boom angle
3	Radius	ID must be 0. (virtual sensor)
4	Trim angle	For slope measurement
5	List angle	Same ID as trim sensor above
6	A2B	Same ID as the load sensor above

Table: The pipelayer sensor list

How to restore default factory settings:

It is possible to return the display to its factory settings. This will restore the original sensor list, geometric dimensions, system limits to their original values, with the original list of sensors.

To restore the default factory settings:

1. Go to menu ***4)*** and press ***Next*** to access the second page. Select ***4J) MEMORY BANKS***.
2. Enter the user password ‘aza’ and press ***Enter***.
3. Select **Restore Default**. The system will restart with the original settings.

After restoring to factory settings, the only adjustement that could be required is the ID of a sensor if one has been changed. Verify the sensor list.

Advanced: in menu 4J, it is possible to save all current settings in a memory bank for possible restoration later. Like a backup, it could be useful to save all the internal settings in a memory bank before changing several parameters in the system. If needed, the system could then be returned to its earlier configuration by restoring a previously saved memory bank.

Motion cut and other LMS inputs and outputs

Go to menu **5C**. Items 1 and 2 are the two LMS outputs. The LMS indicates if the outputs is supposed to be in 'safe' condition or 'alarm' condition. In 'safe' condition, a voltage will be output on the motion cut wire.

Self-test : if the self test indicates **Pass**, it means that the display reads back the expected voltage.

1) A2B and Overload	Status: Safe Self-Test: Pass
2) Free swing cut	Status: Safe Self-Test: Pass
3) Mute input	Status: Safe Self-Test: Pass*
4) Rig mode input	Status: Safe Self-Test: Pass*
5) Lightbar 1	Status: Safe Self-Test: Pass
6) Lightbar 2	Status: Safe Self-Test: Pass
7) Lightbar 3	Status: Safe Self-Test: Pass
8) Optional	Status: Safe Self-Test: Pass

Table: Menu 5C - testing the outputs

****Important:*** The items #3 and #4 are usually inputs connected to other equipment, switches or joystick. The output function may indicate a fail and it is normal because they are actually inputs in the default configuration. Access the menu 5E to verify the status of those two inputs.

For test purposes, it is possible to set the signal of an output manually, in this screen. To manually change the output of a wire, select it and press the **Enter** key. To have a voltage applied on a wire, its status must be "Safe" and to have 0 volts on it, its status must be "Alarm". If the self-test indicates "Pass", it means that it reads the expected voltage level.

connector should have power on wires 10 & 11.

LMS Lightbar diagnostic:

The LMS top five light should match the lights on the pipelayer boom. To set the light bars in a specific way, look in the table which control wires should be active.

Example: to light all 5 external lights, the LMS light bar signals 1 & 3 should be active. Access menu 5C as shown above, turn those two signals to Safe status, which means havnig votlage. For diagnostic purposes, the LMS

External light bar	Control wires	Pin
Green #1	Light bar signal 1	9
Green #1&2	Light bar signal 2	10
Green #1,2&3	Light bar signal 3	11
All greens + amber	Light bar signals 1&2	9+10
All 5 lights	Light bar signals 1&3	10+11

LMS input signals:

Alternatively to the above, access menu **5E) Digital Input** to see the status of the two digital input signals:

No 1 Mute input Off / On

No 2 Rigging mode input Off / On

System Sensors Diagnostic

1. Go to menu ***5A) System Sensors Diagnostic.***
2. Select the sensor and press ***Enter*** to see the sensor data in menu ***5A1) Sensor information***.
3. Press ***Exit*** to return to menu ***5A)*** and select an other sensor or press ***Exit*** again to return to the operation display.

Radio Network Diagnostic

1. Go to menu ***5B2) Last sensors received***. Sensors are shown with their radio ID number and the sensor type.
   a. Use ***Up*** and ***Down*** to scroll through the list.
   b. Press ***Exit*** to return to menu ***5B).***
2. Go to menu ***5B3) Search for sensors***.
   a. Press ***Enter*** to launch a sensor search.
3. Go to menu ***5B4) Bit error rate test***. This test should only be conducted by technical service personnel.
4. Press ***Exit*** to return to the operation display.

Display Diagnostic

1. Go to menu ***5D) Display Diagnostic***.
   1) Time: current time according to the LMS internal clock.
   2) Date: current date according to the LMS internal clock.

Example of alert messages:

Alert:

"Load ID: G15000 Maximum limit"

Description:

The sensor indicates a value greater than the operator adjusted limit.

WARNING! Do not operate the pipelayer beyond the limits specified by the manufacturer.

- Verify operator adjusted limits in the limit menu.

Alert:

"Angle ID: G15000 Minimum limit"

Description:

The sensor indicates a value less than the operator adjusted limit.

WARNING! Do not operate the pipelayer beyond the limits specified by the manufacturer.

- Verify operator adjusted limits in the limit menu.

Alert:

"Load ID: G15000 Low battery"

Description:

Less than 10% of battery life remains in the sensor.

- Schedule battery replacement for the next available opportunity. Typically several weeks of operation remain from the moment the sensor low battery warning is first triggered.

Alert:

"Load ID: G15000 Not received"

Description:

The display isn't receiving communication from the sensor.

- Verify that the sensor ID number programmed matches the ID number of the sensor installed on the pipelayer. Go to menu ***5A1***.

Alert:

"Verify white wire (unexpected voltage)"

Description:

Voltage is detected on the lockout wire when in alarm*. With the standard relay configuration voltage should not be present on a lockout wire in alarm condition.

- Verify the wire connection. Refer to the Power Supply and Lockout Connection sub section of this manual.

Alert:

"Verify white wire (shorted to ground)"

Description:

Voltage is not detected on the lockout wire when safe**. With the standard relay configuration voltage should be present on a lockout wire in safe condition.

- Verify the wire is not shorted to ground.
- Verify the wire is not connected directly to the valve coils; a relay should be installed between the wire and the valve coils. Refer to the Power Supply and Lockout Connection sub section of this manual.

Alert:

"Main out of chart"

Description:

One or more primary conditions of the chart selected for the hoist is not met.

- Verify the conditions of the selected rated capacity chart.

Alert:

"Main angle above chart maximum"

Description:

The boom or jib angle is above the maximum angle permitted by the selected chart. (For charts determined by radius only, this message will occur when the radius is less than the minimum radius permitted by the chart).

- Verify the boom and jib angles permitted by the rated capacity chart selected.

Alert:

"Main angle below chart minimum"

Description:

The boom or jib angle is under the minimum angle permitted by the selected chart. (For charts determined by radius only, this message will occur when the radius is greater than the maximum radius permitted by the chart).

- Verify the boom and jib angles permitted by the rated capacity chart selected.

4. USB TOOL

Download data or upload capacity charts using a USB mass storage device (USB key) without removing the display from the pipelayer.

CAUTION! Before transferring (or downloading) data logger or firmware updates, make sure the pipelayer is stopped and is in a safe state. The pipelayer cannot be monitored during the download process.

Figure: Transfer charts or data logger files

4.1 Data logger transfer from Display

4.1a Transfer from display to USB

IMPORTANT! To copy the data logger to the USB key, a password is required; contact LSI technical support to get the download password. The Display ID will be asked.

1. **Make sure there is at least 8 MB of available space on the USB key**. Connect the USB key in the USB port, on the left side of the display.
2. After a short delay (about 2 seconds), the "***USB MENU***" shows up on the LCD.
3. Select "***COPY DATALOG. TO USB***" and press ***Enter***. In most case, you will be prompted to enter a password; enter the download password given by LSI technical support and press ***Enter***. Press ***Enter*** once again to confirm the data logger download.
4. Transfer progress is indicated on screen.
5. When the transfer is done, "***TRANSFER SUCCESSFUL***" will appear. Press ***Enter***, then unplug the USB key.
6. The pipelayer is now ready for operation.

4.1b Transfer from USB device to PC

1. Connect the USB key to a computer.
2. The data logger file is located in the root directory of the USB device: "*LSI_MM_dd_yyyy_hh_mm_ss.dtl*" where the double letters represent the time and date of the USB transfer. The size of the file should be 8192 kB.

4.1c Troubleshooting

Problem:

The file does not appear on the USB key.

Solution 1: Did the transfer complete successfully? Try again.

Solution 2: Look in the root directory of the USB key? The root directory is the folder that appears when you open the USB key.

Problem:

The file appears on the key but its size is 0 kB.

Solution: Did the transfer complete successfully? Try again.

Problem:

The following message appears on screen during the transfer: "***UNABLE TO CREATE FILE. REPLACE USB***"

Solution 1: The USB device may not work correctly. Replace the USB device.

Solution 2: The USB device may be in read only mode. Allow read/write permissions.

Problem:

An error message appears on screen during the transfer: "***ERROR ##***", where **##** is the error number.

Solution: restart the LMS and try again to transfer the file. If the trouble persists, contact LSI technical support.

Problem:

Nothing happens when the USB key is inserted into the USB port of the display.

Solution: Insert the USB key in the USB port, power down and then power up the display.

4.2 Updating the display

If a display software update is needed or a load chart update, follow these steps:

1. Connect the USB key to a computer and copy the update file on the USB key.
2. Connect the USB key in the USB port.
3. After a short delay (about 2 seconds), the "***USB MENU***" will show up on the LCD. Select "***GET FILE FROM USB***" and press ***Enter***.
4. Choose the file to upload and press ***Enter***. Example typical file name: "*SPKG3_XXXX.820*"

5. A password may be required; enter the upload password given by LSI technical support and press *Enter*.

> ***IMPORTANT!*** **Contact LSI technical support to get the upload password;** this password changes according to the random number indicated on the LCD**. Please provide the random number.**

6. Transfer progress is indicated on screen.
7. When the transfer is done, "***TRANSFER SUCCESSFUL***" will appear. Press ***Enter*** and then unplug the USB key. The LMS will restart by itself.

4.3 Data Logger Viewer

The data logger viewer is a software application used to display the data logger log file on a personal computer (PC).

The data logger viewer converts the log file to a text (binary) file, and then displays the contents. Two reports can be produced and transferred to Excel, the full report and the wind speed report.

4.3a Installation on a PC

Install the CD in a CD-ROM drive. The interactive installation process should start automatically within 30 seconds; if not then:

1. Click Start.
2. Click My Computer.
3. Double-click on the CD-ROM drive.

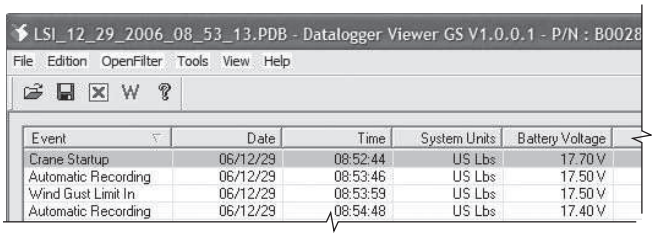

Figure: Excerpt of a full report in Data Logger Viewer

4. Double-click on `setup.exe`.
5. Complete the installation as instructed on screen.

4.3b Quick Start

1. Start the data logger viewer application.
2. Open the log file (see section 4.1b). Only `.dtl` files generated by the LMS data logger can be displayed.

4.3c Full Report

To export the full report to Excel, click on the Full Report button in the tool bar.

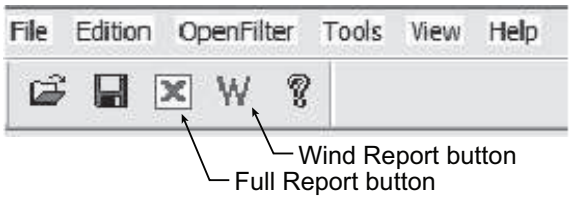

Figure: Data Logger Viewer tool bar

Table: Full report column headings

Column	Description
Event	Record trigger*
Date	Event date stamp.
Time	Event time stamp.
System Units	Length units (metric or US) and weight units at the time of the event.
Battery Voltage	Display power supply voltage at the time of the event.
Temperature	Internal temperature of the display.
Firm. Version	Display firmware version at the time of the event.
Sensor # 1	Sensor type: the sensor number corresponds to the sensor list programmed in the LMS.
Sensor Status	Sensor was active or inactive at the time of the event.
Sensor Battery	Sensor battery level.
Value	Sensor value.

* *Examples: Pipelayer start-up, sensor alarm. The beginning and end of sensor alarms are indicated as "in" and "out": examples: "overload in", "overload out".*

5. MAINTENANCE

5.1 Sensors

5.1a Replacing Sensor Battery

IMPORTANT! **Protect the interior of the sensor from dirt and humidity at all times.**

IMPORTANT! **Both lithium or alkaline batteries can be used, however lithium battery will last about 2.5 times longer.**

1. Unscrew the two allen screws about a quarter of an inch.
2. Insert a flat bladed screwdriver in the battery cover notch to pry the box away from the mounting plate. The silicone seal may cause some resistance.

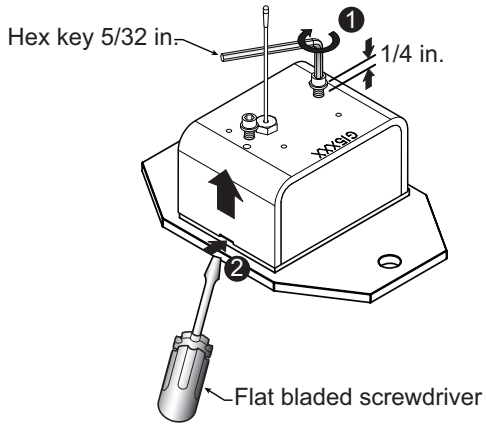

Figure: Remove the sensor box from the mounting plate

3. Remove the battery by hand.
4. Remove the remaining silicone from both the box and the mounting plate.
5. Install the new battery: insert the positive end and then push in the direction of the positive pole.

Note: A 3.6 volt lithium "D" cell battery will provide about two years of battery life for a load cell, while an alkaline "D" cell battery will provide less than one year of battery life.*

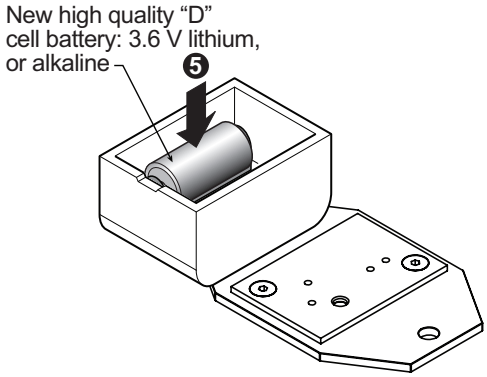

Figure: Install the new battery and reconnect the data wires

6. Apply a non-corrosive RTV silicone all around the edge of the mounting plate to create a new seal without bubbles or breaks.

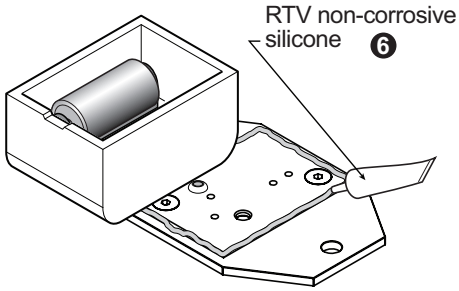

Figure: Apply non-corrosive RTV silicone

7. Reposition the box over the mounting plate and screw in the hex screws. **Do not overtighten**

*** Actual battery life will vary greatly depending on the application, the frequency of use, the age and quality of the battery etc.**

5.2 Replacing a Sensor Antenna

Heavily damaged antennas (ripped out, sheared off, wire exposed and fraying etc.) should be replaced to ensure effective communication between the sensor and the cabin mounted display unit.

This procedure may be followed without removing the sensor from the pipelayer if it is safe to do so. If removed, an angle sensor must be re-calibrated during reinstallation for correct angle display (see the angle sensor installation section of the user's manual).

IMPORTANT! **The interior of the sensor must be protected from dust, grime and water at all times.**

1. Place the pipelayer, boom, jib or ball hook such that the sensor is safely accessible.
2. Clean dust, grime and water from the sensor.
3. Identify the short black whip antenna and the white hex bolt securing it.
4. Inspect the antenna for signs of obvious physical damage.
5. Carefully unscrew the white nylon hex bolt completely and slide it up the antenna.

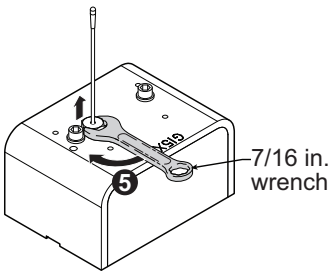

Figure: Unscrew the white nylon hex

6. Grip the antenna by the base of the black plastic sheathing and pull it straight out of the hole in which it is seated. Place the old antenna aside.

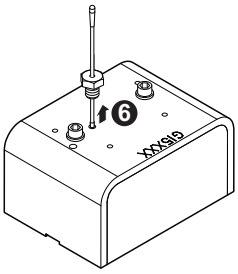

Figure: Pull out the antenna

7. Slide the white nylon hex bolt to the middle of the length of the new antenna.
8. Coat the exposed metal foot of the new antenna with an electrical insulating compound by carefully inserting it in the mouth of the compound tube.

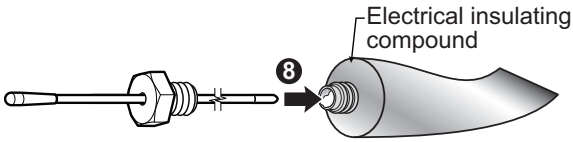

Figure: Coat the exposed metal foot of the antenna

9. Hold the new antenna by the black plastic sheathing and guide it through the hole in the sensor box. Carefully seat the antenna in its mating connector. When the antenna is correctly seated, pulling on it will be met with light resistance.

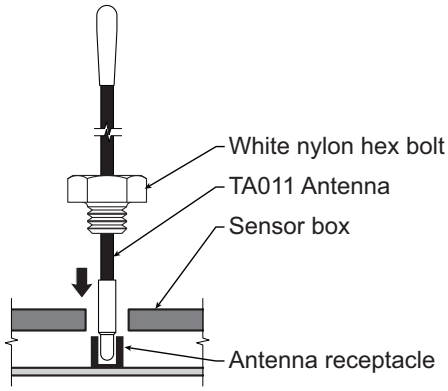

Figure: Install the new antenna

10. Carefully re-thread, screw-in and tighten the white nylon hex bolt to secure the antenna in place. **Do not overtighten**.
11. Reinstall the sensor if necessary (if removed from the boom or jib, an angle sensor will require re-calibration during the installation procedure, see the angle sensor installation section of the user's manual).
12. Verify that the sensor functions properly.

5.4 Load Cells

WARNING! Heavy shock may affect load indication accuracy. Inspect the load cell regularly for clearly visible dents or scratches. Test the load indication if collision damage is visible.

5.4a Reading Accuracy

Load pins must be calibrated at installation and every time thereafter the installation, the load sensor or the transmitter is changed.

SAE J 159 4.2.1 recommends load indicating devices should show not less than 100% of the actual load and not more than 110% of the actual load.

5.4b Load Testing

The load pin must be tested every year for accuracy. The simplest way of testing a load pin is to lift at least two known weights. A test weight should be known with an accuracy of ±1%. If the load pin is installed at the boom tip dead end, all additional equipment such as blocks, slings, sensors, etc. should also be known to an accuracy of ±1%.

Determine the accuracy of the tested system with the following formula:

$$\frac{\text{Indicated Load}}{\text{Actual Load}} \times 100 = \%\ \text{of Load}$$

(Reference: SAE-J-159 7.3)

The test loads must be significantly relative to the load pin capacity. The minimum test weight is about 20% of the safe working load; a good test weight is greater than 50% of the SWL. For example, a 30 000 lb load pin on four parts of line has a SWL of 120 000 lb; the minimum test load in this case would be 24 000 lb, a good test load would be 60 000 lb or more.

5.4c Care

Battery. Lithium batteries older than 18 months old (alkaline batteries over 6 months old) should be changed at the first available planned inspection even if there is not yet a low battery warning. This will avoid costly delays in the field.

Corrosion. Verify that no corrosion is visible on the battery holder inside the load cell transmitter. If some trace of corrosion is visible, rub it off gently and put a small amount of dielectric grease* on each battery holder post to protect the contacts.

Mechanical stresses. Verify the load cell sides for dents or heavy scratches. The side of the load cell under the transmitter box is the most sensitive region. Engraving a number in this area will affect load cell accuracy and reliability. If the transmitter box has been hit and the box does not fit perfectly to the underlying link, please call to have it repaired. Engraving on the transmitter box sides will not affect reading.

Seal. If the transmitter box has been removed it must be correctly resealed with RTV non-corrosive silicone.

Antenna. Small scratches on the antenna will not affect radio communications. A heavy bending of the antenna or bare sections on the wire may reduce the radio efficiency.

Hex bolts. The hex head bolts on the transmitter box are there to protect the antenna and to hold the transmitter box on the load cell link. If one or both hex nuts are scratched, it will not affect the load cell readings or operation. If the bolt head is bent or sheared verify that the transmitter box fits tightly to the load cell link before contacting LSI technical support for replacement bolts.

*** Dow Corning dielectric grease № 4**

6. TROUBLESHOOTING

Display Not On

1. Verify the connection between the LMS harness and the cabin harness
2. Verify the pipelayer battery, the fuse and the accessory switch.
3. Carefully disconnect the yellow cable from the display unit and reconnect it.

Display In Alarm

1. Identify the sensor in alarm. Place the sensor in safe condition.
2. Verify that the limits, the parts of line and the tare are correctly adjusted.
3. Verify all sensor batteries: see *Battery Diagnostic* troubleshooting section.
4. Verify the red light on the sensor box flashes (release the wire rope of an anti-two-block, change the load on a load sensor, change the angle of an angle sensor, change the boom length of a length sensor).
5. Verify radio communication: see *Radio communication* troubleshooting section.
6. If no load charts have been selected, access the Pipelayer Rigging menu (menu #2) and follow the steps to select a load chart. Make sure the pipelayer sensor's position represent a valid configuration for the selected load chart.

Sensor Malfunction

1. Verify the sensor batteries: see *Battery Diagnostic* troubleshooting section. Make sure the light flashes while inserting the sensor batteries.
2. Verify the red light on the sensor box flashes (change the load on a load sensor, change the angle of an angle sensor, change the boom length of a length sensor).
3. Verify radio communication: see *Radio communication* troubleshooting section.

Battery Diagnostic

Go to menu ***5A) System Sensors Diagnostic***. Select a sensor and press ***Enter*** to verify the sensor status.

- "***Battery: 50%***": 50% of battery life remains (typically several months).
- "***Unable to reach remote sensor***": communication not yet established. Verify the radio ID corresponds to the installed sensor. If the system has not been used for some time, the battery may need to be replaced.
- Battery status is usually known within 2 minutes. When 10% or less battery life remains, for any sensor, a message will be generated (the Info alert light will flash). Follow the *battery diagnostic* procedure to identify the sensor. Batteries do not need to be replaced before the ***Low Battery*** message is generated. Usually several days, or weeks, of operation remain from the moment the ***Low Battery*** message comes. A new high quality alkaline or lithium 'D' cell battery may be used.

Radio communication

1. Verify that the antennas have a direct clear line of sight to each other.
2. Verify that the antennas do not point directly towards, or directly away from, each other.
3. Verify that the antennas are not in contact with metal other than the sensor itself.
4. Verify the antenna for damage.
5. Go to menu ***5A) System Sensors Diagnostic***. Select a sensor and press ***Enter*** to verify the sensor status.

- "***Received RF power: 85%***" means radio reception is at 85%.

7. LMS MENU OUTLINE

1) Parts of Line

2) Pipelayer Rigging

3) Display Settings

1) Unit
2) Language
3) Backlight mode
4) Rounding
5) Display mode: pipelayer or excavator

4) Installation

4A) Sensor List

4A1) Sensor type and radio identification number

1. Configuration select (automatic, manual)
2. Configuration number
3. Start up page

4B) Sensor Calibration

4B1) Automatic value calibration wizard
4B2) Manual parameter adjustment
4B3) Reset sensor parameters

4C) Radius and Height Settings

1) Boom length
2) Slew offset
3) Boom foot height offset
4) Tip height tolerance
5) Boom top length
6) Boom top offset
7) Jib offset
8) Lattice extension offset
9) Jib mounting point perpendicular
10) Jib mounting point parallel
11) Reel includes manual
12) Manual boom section length
13) Fully retracted boom length
14) Fully extended boom length
15) Main hoist
    15A) Jib length
    15B) Luffing jib length
    15C) Lattice extension length
    15D) Sheave head length perpendicular
    15E) Sheave head length parallel
    15F) Sheave radius
    15G) Deduct
16) Auxiliary hoist
    16A) Jib length
    16B) Luffing jib length
    16C) Lattice extension length
    16D) Sheave head length perpendicular
    16E) Sheave head length parallel
    16F) Sheave radius
    16G) Deduct

4D) Chart Settings

1) Rated capacity indicator
2) Pipelayer capacity chart interpolation
3) Out of charts default working load limit
4) Enable start section
5) Enable stop section
6) Retracted boom length tolerance
7) Intermediate boom length tolerance
8) Extended boom length tolerance
9) Radius tolerance
10) Boom angle tolerance

4E) Mast Settings

4F) Work Area

4F1) Work Area Limit Wizard
4F2) Warning Settings
4F3) Erase Work Area

4G) Load Moment Indicator

4H) Password Settings

1) Administrator password
2) User password
3) Tare menu password protection
4) Limit menu password protection
5) Info menu password protection
6) System start-up password protection
7) Parts of Line menu password protection
8) Chart Rigging password protection
9) Display Settings password protection
10) Sensor List password protection
11) Sensor Calibration password protection
12) Radius Settings password protection
13) Chart Settings password protection
14) Memory Banks password protection
15) Data logger password protection
16) Lockout Settings password protection
17) Network Options password protection
18) System Diagnostic password protection
19) Alarm Bypassed protection

4I) Network Options

4I1) Network control
4I2) Repeater list

4I3) Set up sensor repeater

4I4) Install sensor update

4J) Memory Banks

1) Save config. A (Copy configuration to memory bank A)
2) Save config. B (Copy configuration to memory bank B)
3) Save config. C (Copy configuration to memory bank C)
4) Get config. A (Copy memory bank A to current configuration)
5) Get config. B (Copy memory bank B to current configuration)
6) Get config. C (Copy memory bank C to current configuration)
7) Restore default (Restore factory configuration)
8) Clear configuration

4K) Data Logger

4L) Lockout Settings

4M) Boom Deflection

5) Diagnostic

5A) System Sensors

5B) Radio Network

5B1) Radio network

5B2) Last sensors received

5B3) Search for sensors

5B4) Bit Error Rate Test

5C) Lockout

1) A2B and overload
2) Free swing cut
3) Mute input
4) Rigging mode input
5) Light bar 1
6) light bar 2
7) Light bar 3
8) Optional

5D) Display

1) Time
2) date
3) Time clock battery test
4) External power supply voltage
5) Internal temperature
6) LMS base station identification number
7) LMS (portable) battery level
8) Radio certification
9) Radio frequency

5E) Digital Input

1) Mute Input
2) Rigging mode input

5F) Current Alarms

6) System Limits

7) Tare

8) Information

1. Software package
2. Firmware
3. Language pack
4. graphic library
5. capacity chart
6. sensor update pkg
7. bios
8. usb driver

SkyAzúl, Inc.
16 Walnut Street
Middletown, MD 21769
Phone 301-371-6126
Fax 301-371-0029
info@skyazul.com

www.skyazul.com