SkyAzúl
EQUIPMENT SOLUTIONS

MG534
Link-Belt

Service Manual

NOTICE

SkyAzúl makes no warranty of any kind with regard to this material, including, but not limited to, the implied warranties of merchantability and/or its fitness for a particular purpose.

SkyAzúl will not be liable for errors contained in this manual or for incidental or consequential damages in connection with the furnishing, performance, or use of this manual. This document contains proprietary information, which is protected by copyright, and all rights are reserved.

No part of this document may be photocopied, reproduced, or translated to another language without the prior written consent of SkyAzúl.

SkyAzúl reserves proprietary rights to all drawings, photos and the data contained therein. The drawings, photos and data are confidential and cannot be used or reproduced without the written consent of SkyAzúl. The drawings and/or photos are subject to technical modification without prior notice.

All information in this document is subject to change without notice.

SkyAzúl, Inc.
16 Walnut Street
Middletown, MD 21769
Fax 301-371-0029
info@skyazul.com

Table of Contents

Introduction 1
- Required Tools 1
- Number Conversion 1
- Number Entry 2
- The Display 3

Where To Go For Help 4

System Overview 5

Problem Finder 6
- System Self-Test 6
- Display Console Problems 6
- Fault Reporting And Fault Codes 7
- Group “A” Fault Codes 9
- Group “B” Fault Codes 11
- Group “C” Fault Codes 12
- Group “D” Fault Codes 13
- “No Fault Code” Problems 13

Computer Unit 17
- Computer Unit Overview 17
- Computer Unit Layout 17
- Internal Status Indicators 18
- The COMM Indicator 19
- Computer Unit Replaceable Parts 19
- Pressure Sensors 21
- Replacing The Computer Unit 22

Display Console 24
- Display Console Overview 24
- Checking The Display Console 24
- Display Console Removal and Installation 25
- Compact Flash Card 25

Remote Load Indicator 27
- Remote Load Indicator Overview 27
- Checking The Remote Load Indicator 27

Extension Reel 29
- Extension Reel Overview 29

Checking the Reel-Off Cable Layering 29
Checking The Extension Sensor Drive Voltage 30
Checking The Boom Extension Sensor Voltage 30
Extension Sensor Setup 30
Checking The Angle Sensor Pendulum 32
Checking The Angle Sensor Drive Voltage 33
Checking The Angle Sensor Voltage 33
Angle Sensor Setup 34
Extension Reel Replaceable Parts 35
Anti Two-Block (ATB) Function 41
Anti Two-Block Function Overview 41
ATB Switch Configurations 41
Checking The Extension Reel-Off Cable 42
Checking The ATB Circuit 42
Power, Kickout, and Boom Mode Outputs 44
Swing Sensor 45
Swing Sensor Overview 45
Checking the Swing Sensor Drive Voltage 45
Checking The Swing Sensor Output Voltage 46
Checking The Swing Sensor Resistance 46
Swing Sensor Setup And Checks 46
Appendix A A-1
Frequently Asked Questions A-1
Appendix B B-1
Glossary of terms B-1

Introduction

This manual describes the troubleshooting process for the Link-Belt MG-534 Rated Capacity Indicator System (hereinafter referred to as "the system") in an on-site environment.

Required Tools

- 1/4" nut driver or T15 Torx driver
- Digital or bubble level calibrated and accurate to 0.1° at level
- 100 foot measuring tape - fiber type graduated in tenths of feet

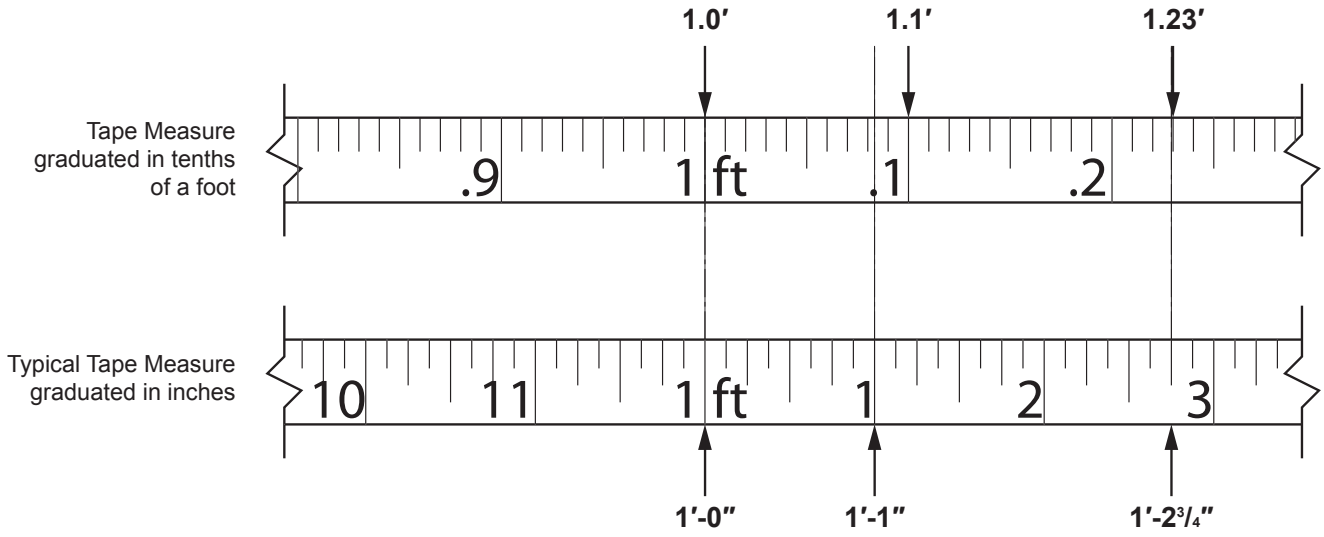

Note: The computer calculates measurements in feet and tenths of a foot, so having the correct measure will facilitate entering measurements.

- Digital volt/Ohm Meter capable of measurements to three decimal places

Number Conversion

If you are using a standard tape measure, the measurement must be converted into feet and tenths of a foot. For example: a distance of 35'–6" would be entered into the system as 35.5 feet. Whole inches can be easily converted by dividing by 12 (6/12=.5). Fractions of an inch are converted by dividing the numerator by the denominator. For example: 1/4 inches would be entered as .25 (1/4=.25). Conversion of whole inches and fractions of an inch (for example 6-1/4") are converted by first converting the fraction to a decimal and then dividing by 12. In this case 6-1/4" is converted to 6.25 and then divided by 12 which equals 0.520.

When entering weights, the number must be converted by moving the decimal three places to the left. For example: a weight of 1,400 pounds would be entered as 1.4, and a weight of 300 pounds would be entered as .300.

Number Entry

The system display does use a numeric keypad. Instead, a range of numbers and characters is assigned to a particular key.

To select a particular number, press the key adjacent to the number until it is selected by flashing brackets < >.

When entering negative numbers, select the negative symbol (-) first.

Decimal points are entered the same as numbers.

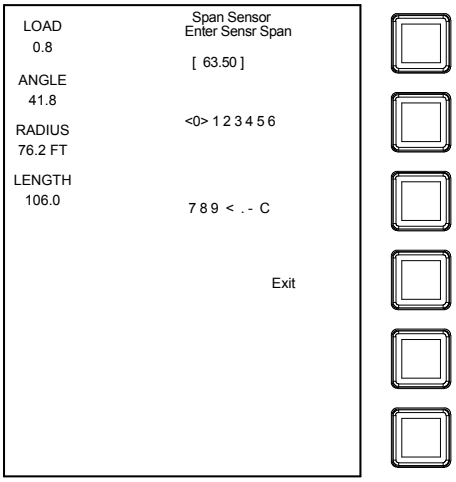

After the desired symbol or number is selected, press the key adjacent to the number entry field (enter key) to enter the number.

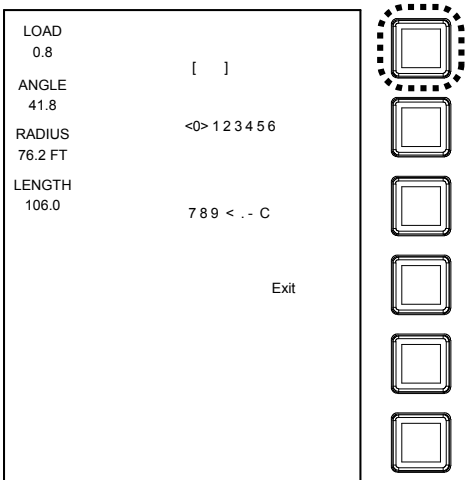

If an error is made in data entry, selecting the "<" symbol and pressing the enter key will delete one character. Selecting the "C" symbol and pressing the enter key will erase the entire entry.

To enter the desired value, the entire number entry field must be filled. Entering a zero at the end of the number will enter the number.

Press the key adjacent to **Exit** to cancel the number entry procedure.

The Display

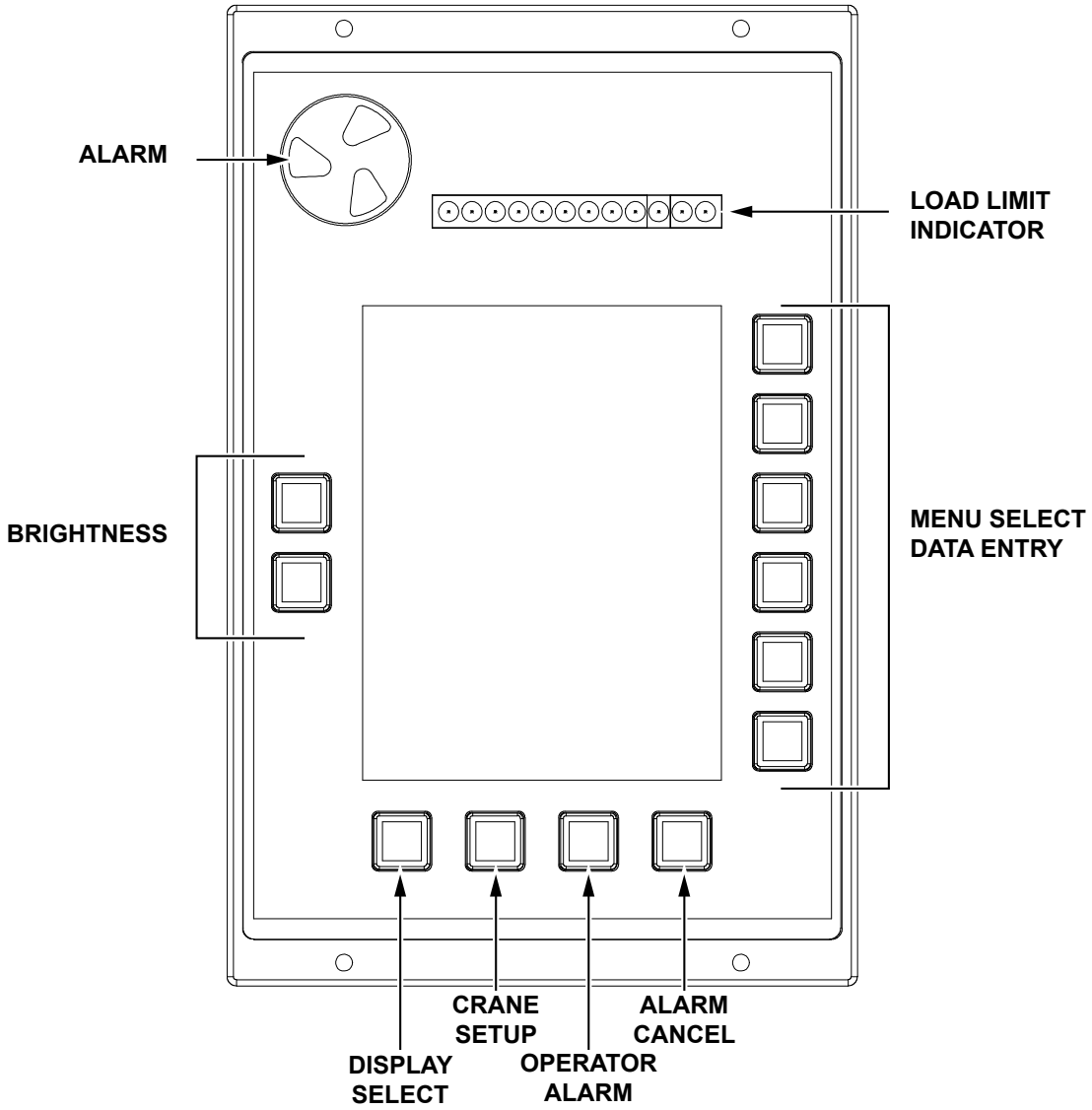

The **Alarm Speaker** sounds approaching overload, overload, violation of operator settable alarms, and other alarm violations.

The **Brightness** keys increase and decrease the brightness of the display.

The **Load Limit Indicator** notifies the operator of load limit, approaching overload (amber lights), and overload (red lights).

The **Menu Select/Data Entry** keys are used to select configuration and select menus and data values during calibration.

The **Display Select** key is used to vies error codes and enter calibration mode.

The **Crane Setup** key is used to configure the crane.

The **Operator Alarm** key is used to configure operator settable alarms.

The **Alarm Cancel** key is used to mute the Alarm Speaker.

skyazul.com

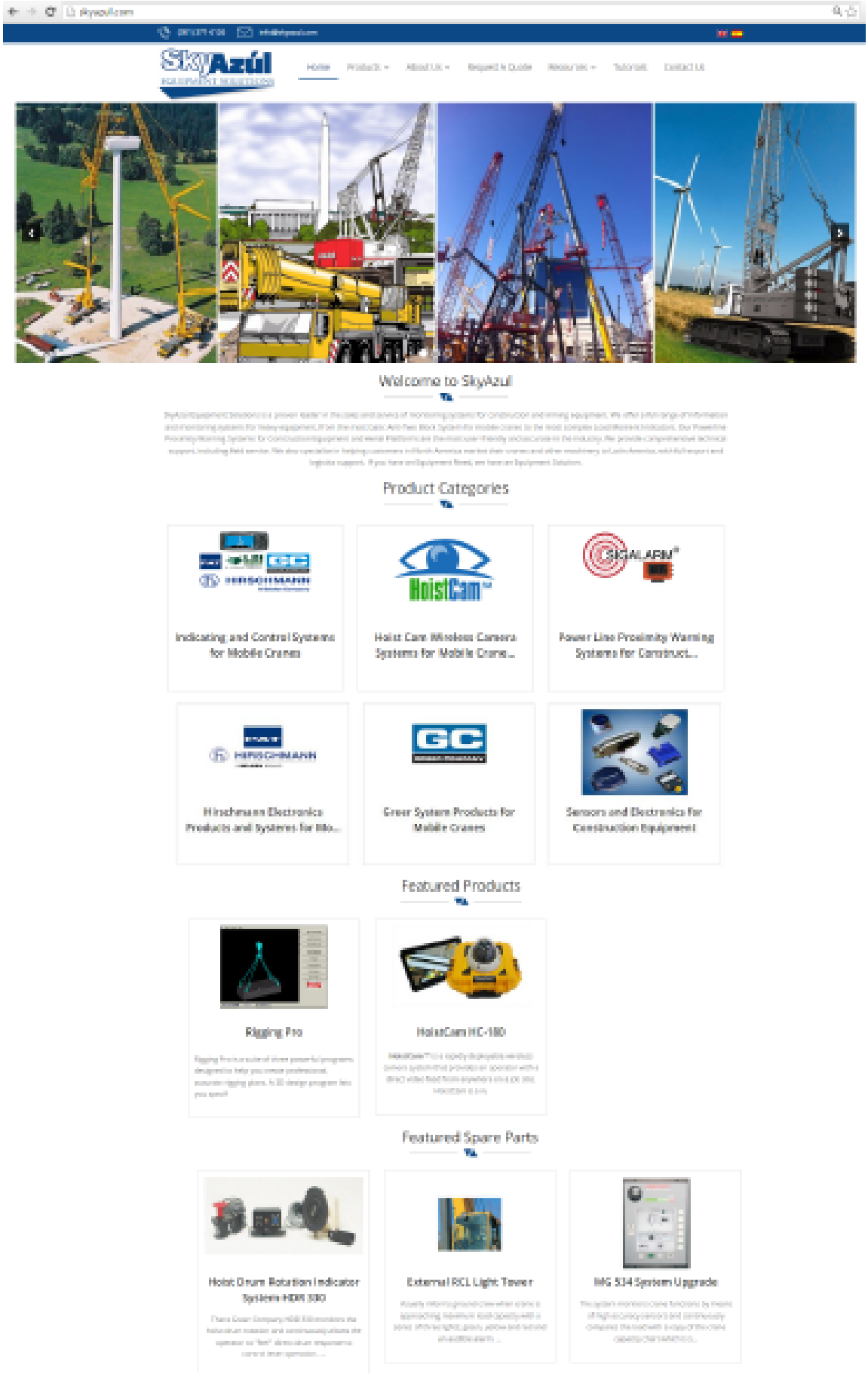
SkyAzul
Welcome to SkyAzul
Product Categories
Indicating and Control Systems for Mobile Cranes
HoistCam
Hoist Cam Wireless Camera Systems for Mobile Crane...
SIGNALARM
Power Line Proximity Warning Systems for Construct...
HIRSCHMANN
Hirschmann Electronics Products and Systems for Mo...
GC
Greer System Products for Mobile Cranes
Sensors and Electronics for Construction Equipment
Featured Products
Rigging Pro
HoistCam HC-180
Featured Spare Parts
Hoist Drum Rotation Indicator System HDR 330
External RCL Light Tower
IMG 534 System Upgrade

System Overview

The system includes a computer, an operator's display console, an extension reel, and various cables and sensors; and is designed to measure and display load weight, calculate and display maximum capacity and percent of rated capacity, display code configuration numbers, and warn of an approaching overload or two-block condition for each crane configuration.

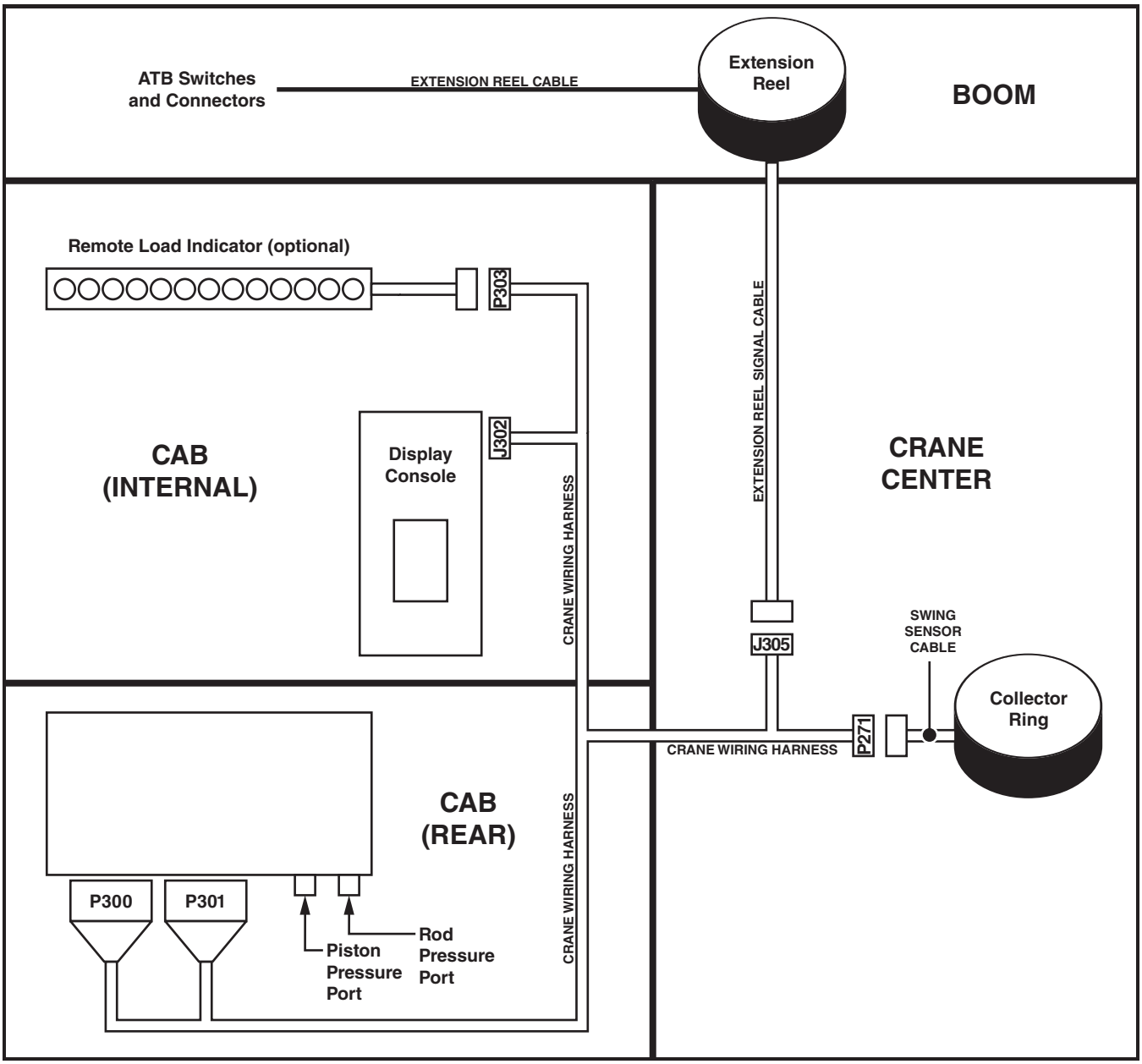

Problem Finder

This section is designed to aid in determining the location and type of problem experienced. It is important to follow the recommendations within this section before contacting the Greer Company.

System Self-Test

When the power is turned on or when the "TEST" button is pressed during operation, the computer and operator's display console perform a "SELF-TEST," which, as far as is possible, verifies that the computer, display console, cables, and all remote sensors are working properly.

During SELF-TEST, all display functions are activated, allowing the operator to check whether or not all indicators are functional.

IMPORTANT!
IT IS IMPORTANT THAT THE INDICATIONS SHOWN DURING THE SELF-TEST ARE RECOGNIZED AND FULLY UNDERSTOOD BY THE OPERATOR IN ORDER TO AID IN CORRECTLY DETERMINING COMPUTER AND DISPLAY COMMUNICATION PROBLEMS.

For eight seconds following "power on" the display will exhibit the following indications:

- All LED's on the load limit indicator will illuminate including approaching overload and overload.
- The audible alarm will sound in the crane cab.
- The display window will show "SYSTEM SELF-TEST IN PROGRESS" along with the crane model number and the Link-Belt Logo.

If any of the above indications do not occur, continue to Display Console Problems on this page.

Display Console Problems

Display console problems are difficult to isolate because of the interaction between the display console and the computer unit. Failure of either unit, or interconnection of the two units, causes malfunction of display console indications. No "FAULT" diagnoses of other system problems can be carried out without the proper function of the display console and it's communication with the computer unit.

To solve problems using display console indications, carefully observe the display console at "power on" and through self-test. Next, use the following chart to help decide the course of action.

Problem	Action
There are no display console indications at all when power is turned on. All displays remain blank and no lights are illuminated.	Refer to "Internal Status Indicators" on page 18.
The red or yellow indicator lights do not illuminate during self-test.	Replace display console.
The display console does not do the self-test. No words or logical numbers ever appear after power is turned on. The displays look jumbled, with lots of missing segments.	Replace display console.

Fault Reporting And Fault Codes

System fault codes provide one of the most important ways to quickly locate and assess problems in the system. Please review this section carefully.

Each time the system is turned on, it goes through a self-testing process lasting eight seconds that automatically detects most faults in the system.

Many fault conditions are detected without a system self-test.

Faults detected in the system during the self-test, are indicated on the display console in the following ways:

- The RED OVERLOAD LAMP will illuminate.
- The AUDIBLE ALARM will sound.
- “FAULT” will be displayed in the lower portion of the graphics display.

Fault codes may be displayed within the graphics display on the display console:

From the normal working screen, press the “Display/Select” key.

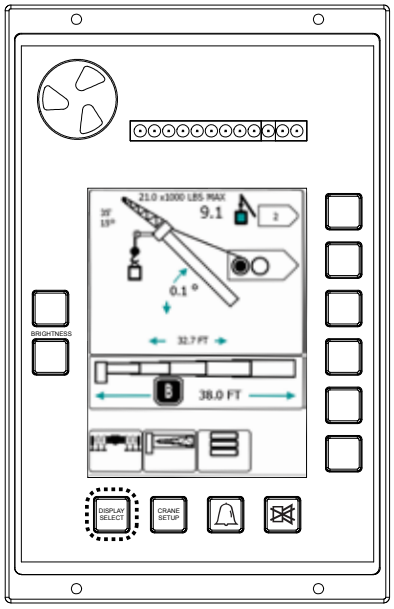

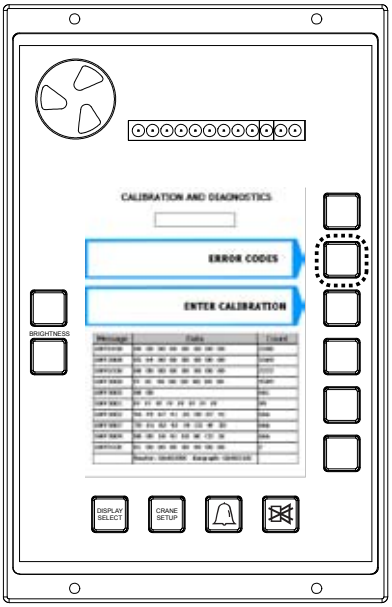

Press the key adjacnt to **Error Codes**.

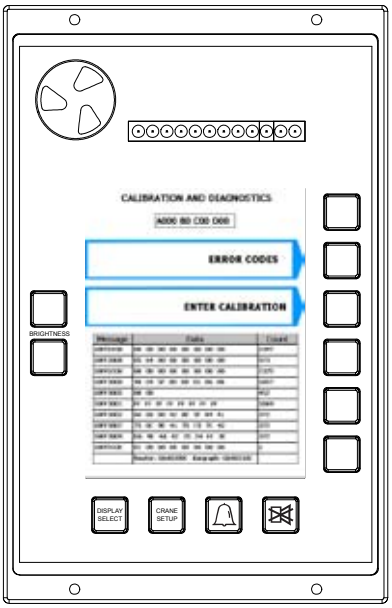

Error codes are displayed.

IMPORTANT!
ALWAYS INVESTIGATE FAULTS IN THE “B” AND “C” GROUPS BEFORE CONTINUING WITH “A” AND FINALLY “D” GROUP FAULTS.

Group “A” Fault Codes

Group “A” fault codes represent faults detected for analog sensors.

Fault Code	Swing Sensor	Boom Angle Sensor	Exten-sion Sensor	Tdx 1 Rod Pressure	Tdx 0 Piston Pressure	Action
000	No Fault Found					None
001					X	Replace computer.
002				X		
003				X	X	
004			X			Refer to “Checking the Boom Extension Sensor Voltage” on page 30.
005			X		X	Replace computer.
006			X	X		
007			X	X	X	
008		X				Refer to “Checking the Angle Sensor Pendulum” on page 32, “Checking the Angle Sensor Drive Voltage” on page 33, and “Checking the Angle Sensor Voltage” on page 33.
009		X			X	Replace computer.
010		X		X		
011		X	X	X		
012		X	X			Refer to “Checking the Extension Sensor Drive Voltage” on page 30.
013		X	X		X	Replace computer.
014		X	X	X		
015		X	X	X	X	
016	X					Refer to “Swing Sensor” on page 45.
017	X				X	Replace computer.
018	X			X		
019	X			X	X	
020	X		X			Refer to “Checking the Extension Sensor Drive Voltage” on page 30, “Checking the Boom Extension Sensor Voltage” on page 30, and “Swing Sensor” on page 45.
021	X		X		X	Replace computer.
022	X		X	X		
023	X		X	X	X	
024	X	X				Refer to “Checking the Angle Sensor Drive Voltage” on page 33, “Checking the Angle Sensor Voltage” on page 33, and “Swing Sensor” on page 45.

Fault Code	Swing Sensor	Boom Angle Sensor	Exten-sion Sensor	Tdx 1 Rod Pressure	Tdx 0 Piston Pressure	Action
025	X	X			X	Replace computer.
026	X	X		X		
027	X	X		X	X	
028	X	X	X			Refer to “Checking the Extension Sensor Drive Voltage” on page 30, “Checking the Boom Extension Sensor Voltage” on page 30, “Checking the Angle Sensor Drive Voltage” on page 33, “Checking the Angle Sensor Voltage” on page 33, and “Swing Sensor” on page 45.
029	X	X	X		X	Replace Computer.
030	X	X	X	X		
031	X	X	X	X	X	Refer to “Checking the Extension Sensor Drive Voltage” on page 30, “Checking the Boom Extension Sensor Voltage” on page 30, “Checking the Angle Sensor Drive Voltage” on page 33, “Checking the Angle Sensor Voltage” on page 33, and “Swing Sensor” on page 45.
032 or higher	Internal Temperature Sensor Fault. Replace Computer.					

Group “B” Fault Codes

Group “B” fault codes represent faults detected for internal analog functions and power feeds to the function kickout and anti-two block switches.

Fault Code	FKO Power Feed	ATB Power Feed	Display Console	ADC 2 Internal Fault	ADC 1 Internal Fault	Action
000	No Fault Found					None
001					X	Replace computer.
002				X		
003				X	X	
004			X			
005			X		X	
006			X	X		
007			X	X	X	
008		X				Refer to “Anti-Two-Block Function" on page 41.
009		X			X	Replace computer.
010		X		X		
011		X		X	X	
012		X	X			
013		X	X		X	
014		X	X	X		
015		X	X	X	X	
016	X					Check crane circuit breakers. Then, refer to “Function Kickout Fuse (FS2)" on page 19.
017	X				X	Replace computer.
018	X			X		
019	X			X	X	
020	X		X			
021	X		X		X	
022	X		X	X		
023	X		X	X	X	
024	X	X				Check crane circuit breakers. Then, refer to “Function Kickout Fuse (FS2)" on page 19.
025	X	X			X	Replace computer.
026	X	X		X		
027	X	X		X	X	
028	X	X	X			
029	X	X	X		X	
030	X	X	X	X		
031	X	X	X	X	X	

Group “C” Fault Codes

Group “C” fault codes represent faults detected for internal computer memories.

Fault Code	Serial EEPROM	Crane Data	RAM	Duty Data	Program	Action
000	No Fault Found					None
001					X	Replace system chip. Refer to “System Chip (IC16)” on page 20.
002				X		
003				X	X	
004			X			Replace computer.
005			X		X	Replace system chip. Refer to “System Chip (IC16)” on page 20.
006			X	X		
007			X	X	X	
008		X				Reset crane data.
009		X			X	Replace system chip. Refer to “System Chip (IC16)” on page 20.
010		X		X		
011		X	X	X		
012		X	X			Replace computer.
013		X	X		X	Replace system chip. Refer to “System Chip (IC16)” on page 20.
014		X	X	X		
015		X	X	X	X	
016	X					Reselect crane setup/configuration. Otherwise, replace computer if not resolved.
017	X				X	Replace system chip. Refer to “System Chip (IC16)” on page 20.
018	X			X		
019	X			X	X	
020	X		X			Replace computer.
021	X		X		X	Replace system chip. Refer to “System Chip (IC16)” on page 20.
022	X		X	X		
023	X		X	X	X	
024	X	X				Reselect crane setup/configuration. Reset crane data. Otherwise, replace computer if not resolved.
025	X	X			X	Reselect crane setup/configuration. Otherwise, replace computer if not resolved.
026	X	X		X		
027	X	X		X	X	
028	X	X	X			Replace computer.
029	X	X	X		X	
030	X	X	X	X		
031	X	X	X	X	X	

Group "D" Fault Codes

Group "D" fault codes represent faults detected for capacity chart selection.

Fault Code	Wrong Swing Area	Wrong Boom Length	Chart Not Found	Action
000	No Fault Found			None
001			X	Check other sensor faults. Reselect crane setup.
002		X		Boom length is out of range for selected chart. Check crane setup, boom length, and boom extension.
003		X	X	Check other sensor faults. Reselect crane setup.
004	X			Swing to correct working area to select chart. Check swing sensor zero position, refer to "Swing Sensor Setup and Checks" on page 46.
005	X		X	Swing to correct working area to select chart. Check swing sensor zero position, refer to "Swing Sensor Setup and Checks" on page 46.
006	X	X		Check other sensor faults. Reselect crane setup.
007	X	X	X	Check other sensor faults. Reselect crane setup.

"No Fault Code" Problems

This section addresses those problems that may occur and are not reported by the computer fault code system.

Anti Two-Block (ATB) Alarm

This section gives direction to fault diagnosis of ATB alarm problems. For detailed information, schematic, and voltages, refer to "Anti Two-Block (ATB) Function" on page 41.

Problem

The ATB alarm is continuously on. Operating the switch at the boom head does not deactivate the alarm.

This problem suggests an open circuit between the computer ATB input and the ATB switch(es), or an open circuit between the computer ATB feed and the ATB switch(es)

1. Check extension reel-off cable for damage.
2. Make sure that the Two-Block switches are correctly connected.
3. Check the slip-ring and wiring inside the extension reel.
4. Check the signal cable from the extension reel to the computer. Check connectors (J305).

Problem

The Anti Two-Block alarm is continuously OFF (safe). De-operating the switch at the boom head, by lifting the ATB weight does not activate the alarm.

This problem suggests a short circuit between the computer ATB input and the computer ATB feed somewhere between the computer and the ATB switch(es).

1. Check extension reel-off cable for damage.
2. Make sure that the Two-Block switches are correctly connected.

3. Check the slip-ring and wiring inside the extension reel.
4. Check the signal cable from the reel to the computer. Check connectors (J305).

Displayed Load Or Radius Errors

This section gives direction to fault diagnosis of load and radius errors as displayed on the display console. Load or radius errors may give rise to early or late tripping of overload alarms. Accuracy of load, radius, length, and angle is determined by the correct installation and maintenance of the system sensors.

Accuracy of load is governed by the radius accuracy, and the extension, angle, and pressure sensors.

Accuracy of radius (unloaded) is governed by the extension and angle sensors.

Before continuing, make sure that there are no system faults.

Check Boom Extension

1. First check that the boom is fully retracted.
2. Check that the extension reel-off cable is correctly layered as a single layer across the extension reel surface. Any stacking of the cable will cause extension errors when the boom is fully retracted, causing the system to exceed the 0.5 ft tolerance allowed by the computer for boom mode selection. If the reel-off cable is stacking on the reel, refer to "Checking the Reel-Off Cable Layering" on page 29.
3. Check the zero of the extension sensor at the fully retracted boom position. Enter calibration mode, refer to "Calibration Mode" on page 4 of the Calibration Manual (W450160). Go to Menu 03 – Span (see page 17 of the Calibration Manual (W450160)), select sensor No. 2 to view the extension value in feet. The value of extension must be between -0.2 and +0.2, with the boom fully retracted. If the extension value is incorrect, refer to "Extension Sensor Setup" on page 30.
4. Fully telescope the boom and check that the displayed boom length value matches the maximum length of the boom. If the length value is incorrect, refer to "Span Calibration" on page 31.

IMPORTANT!
THE REQUIRED ACCURACY OF TAPED RADIUS MEASUREMENTS IS WITHIN 0.1 FEET.

WHEN TAKING RADIUS MEASUREMENTS; ALWAYS USE A GOOD QUALITY TAPE THAT DOES NOT STRETCH. THE TAPE SHOULD BE GRADUATED IN FEET AND TENTHS OF FEET. ALWAYS MEASURE BETWEEN THE SWING CENTER OF THE CRANE AND THE HOOK LINE, USING A SINGLE PART OF LINE, WITH THE CRANE CENTERED OVER FRONT (ROUGH TERRAIN CRANE) OR CENTERED OVER REAR (TRUCK CRANE).

Check Main Boom Radius

1. Fully retract the boom and make sure that the crane configuration is correctly set up.
2. Boom up to about 45° and measure the radius. The measured radius must match the displayed radius within +/- 0.2 ft. If it does not match, refer to "Check Boom Angle" on page 15. If it does match, refer to "Check Pressure Sensors" on page 15.

IMPORTANT!
THE REQUIRED ACCURACY OF MEASURED ANGLES IS WITHIN 0.2°.

WHEN TAKING BOOM ANGLE MEASUREMENTS; ALWAYS USE A GOOD QUALITY INCLINOMETER. MANY INCLINOMETERS ARE ONLY ACCURATE AT 0° (LEVEL). MAKE SURE

THAT A RELIABLE POSITION ON THE TOP OF THE BOOM IS USED TO MEASURE THE ANGLE AND THAT THE INCLINOMETER WILL PROVIDE AN ACCURATE READING AT 0° (ZERO) AND AT 70°.

Check Boom Angle

1. Fully retract the boom.
2. Using an inclinometer, set the boom to 0° (zero) and check that the displayed boom angle value is 0.0°. If the angle value is not 0.0°, refer to "Checking the Angle Sensor Pendulum" on page 32, "Physical Zero" on page 34, and "Zero Calibration" on page 34.
3. Boom up to a high angle (at least 70°) and measure the angle with the inclinometer. Check that the displayed angle matches the inclinometer reading within 0.2°. If the displayed angle is incorrect, refer to "Span Calibration" on page 35.

Check Pressure Sensors

The Pressure sensing system is factory calibrated, therefore pressure sensors may not be individually replaced. Any serious problems will necessitate changing the whole computer unit.

1. Boom fully down until the boom hoist cylinder is fully retracted and on its stop.
2. Loosen both hydraulic connections to the pressure sensors to guarantee zero pressure is present on the sensors.
3. Enter calibration mode (see page 4 of the Calibration Manual (W450160)).
4. Go to Menu 15 – Pressure (see page 45 of the Calibration Manual (W450160)) to view both sensor pressures and nett pressure.
5. Check the PRESSURE values of both sensors. The pressure values should be between -75 and + 75 PSI. If not, replace the computer unit.
6. Check the NETT pressure. This should be between -35 and +35 psi. If not, replace the computer unit.

Boom Mode Selection

This section gives direction to fault diagnosis of BOOM MODE selection problems.

The system provides an output from the computer, which drives a solenoid to power the boom telescope sequence in "A" or "B" modes. The System allows the operator to select either of the two modes only when the boom is within 0 to 0.5 ft of fully retracted.

- If "CRANE SETUP" does not allow selection of a new boom mode:

1. First check that the boom is fully retracted.
2. Check that the extension reel-off cable is correctly layered as a single layer across the extension reel surface. Any stacking of the cable will cause extension errors at fully retracted, which will exceed the 0.5 ft tolerance allowed by the computer for boom mode selection.
3. If the reel-off cable is stacking on the reel, refer to "Checking the Reel-Off Cable Layering" on page 29.
4. Check the ZERO of the extension sensor at fully retracted.

5. Enter calibration mode (see page 4 of the Calibration Manual (W450160)).
6. Go to Menu 03 – Span (see page 17 of the Calibration Manual (W450160)). Select sensor No. 2 to view the extension value in feet. The value of extension must be between -0.2 and +0.2, with the boom fully retracted.
7. If the extension value is incorrect, refer to “Extension Sensor Setup” on page 30.

Computer Unit

Computer Unit Overview

The computer unit is the core of the system. The computer unit provides all the necessary functions to read the sensors, control computations, disconnect functions, and communicate with the display console/internal load indicator.

The computer unit directly connects to the crane wiring harness via a 60-way bulkhead connector. There are no wiring connections or screw terminals within the unit.

Contained within the unit, are the two hydraulic pressure transducers required to sense pressure within the boom hoist cylinder. These sensors and the computer are factory pre-calibrated and, as such, may not be separately replaced in the field.

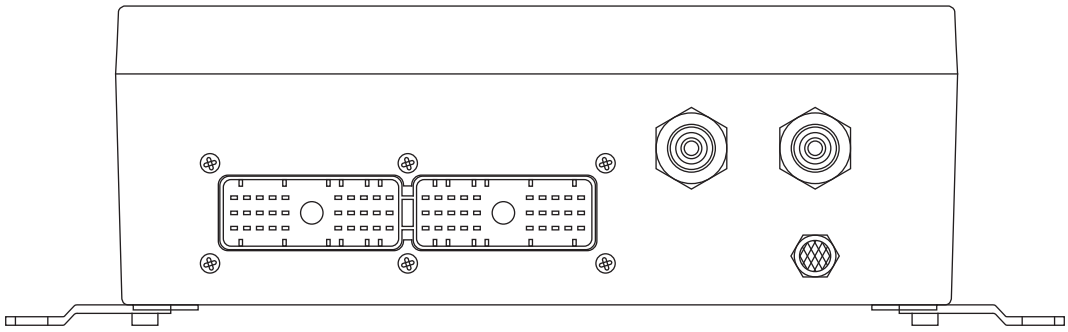

Computer Unit Layout

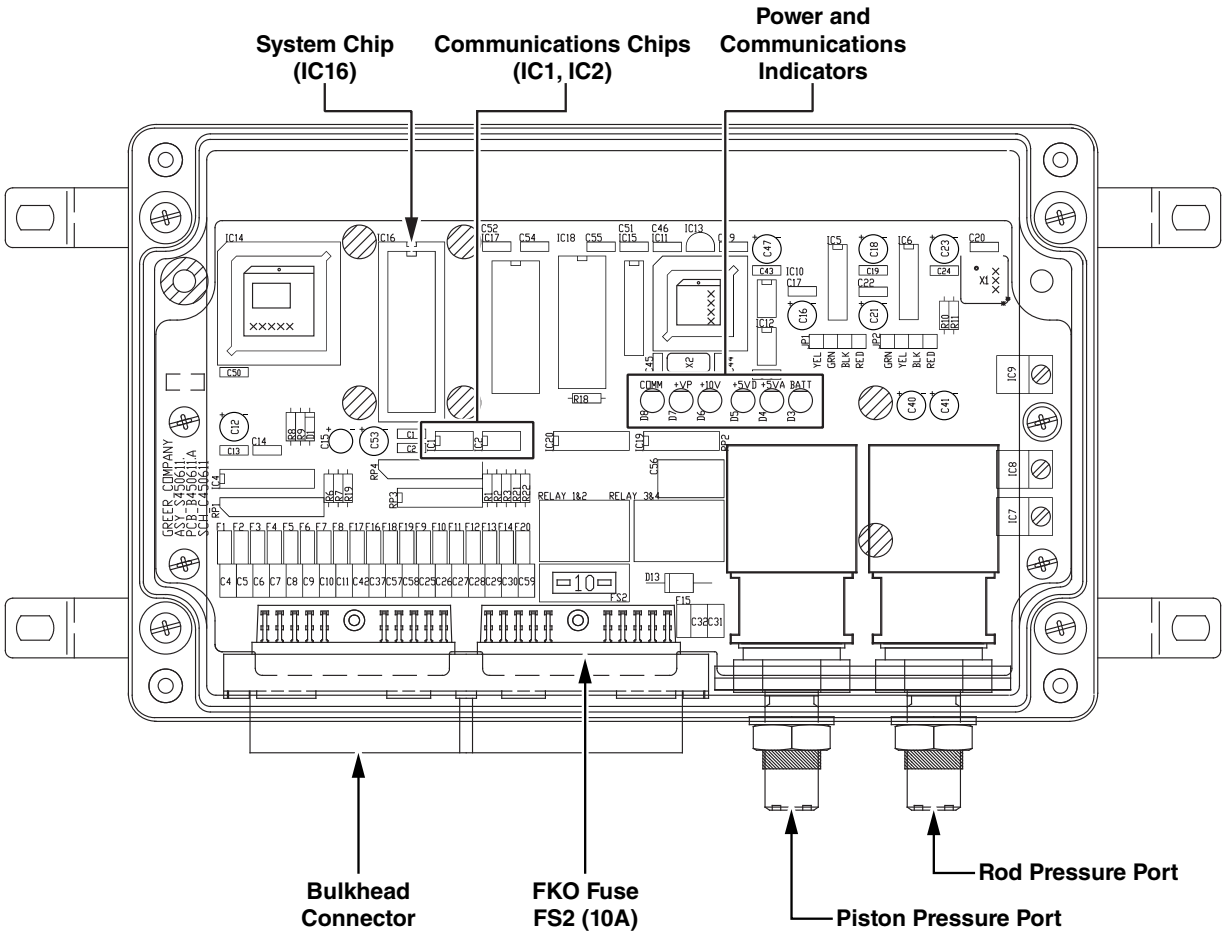

Internal Status Indicators

The computer unit contains a row of indicators to aid in checking power supply and communications operation within the system. Remove the lid of the computer and check these indicators. Refer to the computer unit layout on page 17.

All the indicators are bright green light emitting diodes. There are five power indicators and one communication indicator (COMM). With the exception of the COMM indicator, all indicators should be illuminated at the same brightness level with the system power on.

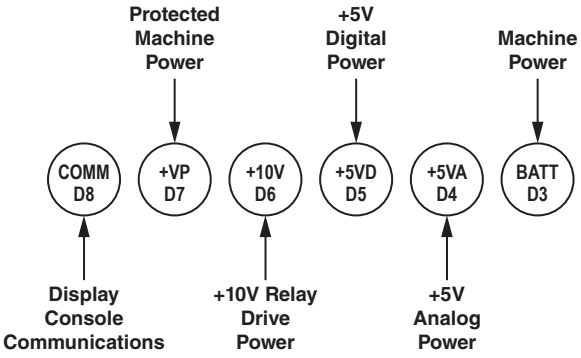

A missing or dimly lit indication points to a power supply problem. Check the indicator chart below for repair actions.

Indicator States	Action
COMM ● +VP ● +10V ● +5VD ● +5VA ● BATT ●	Check crane power and circuit breaker.
COMM ● +VP ● +10V ● +5VD ● +5VA ● BATT ○	+VP power to display console shorted to crane ground. Check display console / load indicator cabling.
COMM ○ +VP ○ +10V ● +5VD ○ +5VA ○ BATT ○	+10V relay power internal short or regulator failure. Replace computer.
COMM ● +VP ○ +10V ○ +5VD ● +5VA ● BATT ○	+5VD digital power internal short or regulator failure. Replace computer.
COMM ○ +VP ○ +10V ○ +5VD ○ +5VA ● BATT ○	+5VA analog power / drive to sensors. Check extension reel connection inside reel and wiring to extension reel.

The COMM Indicator

The COMM indicator provides an indication of the success or otherwise of communication with the display console, and of the running state of the computer program.

Carefully observe the COMM indicator and the display console at power on and through self-test; then, use the following chart to help decide the course of action.

COMM Indicator Indications At Power On	Action
From the moment the power is applied, the COMM indicator does not illuminate. During and after the self -test period of eight seconds, the COMM indicator remains off.	The computer is not running. Check status indicators. Refer to “Internal Status Indicators” on page 18. Try to reset the system by powering off and on again. Listen to the computer for the relays to click. If they do not click, replace the system chip. If not successful, replace the computer. If the relays do click, replace communication chips IC1 and IC2. Refer to “Communications Chips (IC1 and IC2)" on page 20.
From the moment system power is applied, the COMM indicator flashes at a fast rate and never stops. The display shows Communication Error.	Communication with the display has not been made. Check connector at rear of the display console.
At the moment power is applied, the COMM indicator flashes briefly, then switches off. After a few seconds, the COMM indicator starts to flash at a fast rate and never stops.	This is the normal operation of the communication between the computer and display console. If there are any problems with indications on the display console, refer to “Display Console Problems” on page 6.

Computer Unit Replaceable Parts

The COMPUTER UNIT contains three parts that may be replaced in the field:

- A standard 10 amp automotive fuse, protecting the power feed to the function kickout circuit, is located on the circuit board within the unit.
- The system program/capacity chip, known as the system chip (IC16).
- Communications chips (IC1 and IC2) that communicate with the display console and are pluggable.

Function Kickout Fuse (FS2)

The computer unit contains a replaceable fuse that protects the function kickout circuit and relay contacts, in the event that a short circuit across the crane kickout solenoids occurs.

The fuse, identified as FS2 on the computer board, may be replaced in the event that system error codes indicate that the function kickout power feed is missing, and it has been established that the crane circuit breaker is closed and power from the crane is present.

Before replacing the fuse, make sure that any electrical shorts that may have caused the failure of the original fuse have been removed.

⚠WARNING

WHEN REMOVING AND INSTALLING THE FUSE, ENSURE THAT THE CRANE POWER IS TURNED OFF.

System Chip (IC16)

The system chip, identified as IC16 on the computer board, contains program data, capacity charts and calibration data for the crane and is a 28-pin dual-in-line (DIL) device. This chip MUST MATCH the load chart in the crane. Installation of the system chip does NOT necessitate recalibration of the system, but under certain circumstances may require a "RESET CRANE DATA" operation (see "Menu 01 – Crane Data" on page 12 of the Calibration Manual (W450160)) to be performed.

System Chip Removal

1. Turn the power off.
2. Remove the chip from the computer board with a chip removal tool.

System Chip Installation

1. Use an installation tool to insert the new chip into the socket.
2. Ensure that the notch in the chip points to the upper side of the computer unit (opposite side to bulkhead connector and pressure ports.
3. Ensure that all pins are properly inserted into the chip socket. These pins are very easily bent.

⚠WARNING

WHEN REMOVING AND INSTALLING CHIPS, ENSURE THAT THE POWER IS OFF. DO NOT TOUCH THE CHIP PINS UNLESS YOU ARE PROPERLY GROUNDED. STATIC ELECTRICITY CAN DAMAGE CHIPS.

ALWAYS USE A PROPER IC REMOVAL TOOL. USE OF SCREWDRIVERS, FINGERS, OR OTHER IMPLEMENTS MAY DAMAGE THE CHIP OR SERIOUSLY DAMAGE THE CIRCUIT BOARD. RECOMMENDED CHIP REMOVAL AND INSTALLATION TOOLS MAY BE OBTAINED FROM NEWARK ELECTRONICS STOCK NO. 10F7494 AND 10F7497.

FAILURE TO HAVE ALL PINS INSERTED PROPERLY INTO THE CHIP SOCKET MAY CAUSE DAMAGE TO THE SYSTEM AND THE CHIP.

Communications Chips (IC1 and IC2)

The computer unit contains two replaceable communications chips, illustrated in Figure 3.2.

The communications chips, identified as IC1 and IC2, on the computer board provide communication of data between the computer unit and display console (as well as load indicator unit, if fitted). These chips are pluggable and replaceable. Replacement of the communications chip does NOT necessitate recalibration of the System.

It is unlikely that the communications chips will become damaged, but in the event that the COMM indicator remains off at all times, changing these devices may provide a solution. See "Internal Status Indicators" on page 18 and "The Comm Indicator" on page 19.

Communications Chips Removal

1. Turn the power off.
2. Remove the chip from the computer board with a chip removal tool.

Communications Chips Installation

1. Use an installation tool to insert the new chip into the socket.
2. Ensure that the dot on the top of the chip is at the same corner as the IC1, IC2 legend on the circuit board.

3. Ensure that all pins are properly inserted into the chip socket. These pins are very easily bent.

⚠WARNING

WHEN REMOVING AND INSTALLING CHIPS, ENSURE THAT THE POWER IS OFF. DO NOT TOUCH THE CHIP PINS UNLESS YOU ARE PROPERLY GROUNDED. STATIC ELECTRICITY CAN DAMAGE CHIPS.

ALWAYS USE A PROPER IC REMOVAL TOOL. USE OF SCREWDRIVERS, FINGERS, OR OTHER IMPLEMENTS MAY DAMAGE THE CHIP OR SERIOUSLY DAMAGE THE CIRCUIT BOARD. RECOMMENDED CHIP REMOVAL AND INSTALLATION TOOLS MAY BE OBTAINED FROM NEWARK ELECTRONICS STOCK NO. 10F7494 AND 10F7497.

FAILURE TO HAVE ALL PINS INSERTED PROPERLY INTO THE CHIP SOCKET MAY CAUSE DAMAGE TO THE SYSTEM AND THE CHIP.

Pressure Sensors

There are two pressure sensors installed as part of the system. Both pressure sensors are mounted within the computer unit and electrically connected to the computer board within. One is connected to the piston side of the boom hoist cylinder via a flexible hose; the other to the rod side of the boom hoist cylinder via a flexible hose. Piston side hose is protected by a velocity fuse within the boom hoist cylinder valve block on the end of the cylinder(s).

The pressure sensor on the piston side is subject to the hydraulic pressure necessary to support the weight of the boom, any attachments, and the load. The other sensor monitors the pressure necessary to control down motion of the boom. The computer unit uses this information (along with that from other sensors such as extension, length, and angle) to compute the weight of the suspended load.

⚠WARNING

BOTH PRESSURE SENSORS ARE FACTORY PRE-CALIBRATED AND SUPPLIED AS PART OF THE COMPUTER UNIT. REMOVAL OR REPLACEMENT OF THESE DEVICES FROM THE COMPUTER, INVALIDATES WARRANTY AND WILL ADVERSELY AFFECT THE PRESSURE CALIBRATION.

The maximum continuous working pressure for these devices is 250 bar (3625 PSI).

Checking Pressure Sensors

The pressure sensing system is factory calibrated, therefore pressure sensors may not be individually replaced. Any serious problems will necessitate changing the whole computer unit.

1. Boom fully down until the boom hoist cylinder is fully retracted and on its stop.
2. Loosen both hydraulic connections to the pressure sensors to guarantee zero pressure is present on the sensors.
3. Enter calibration mode (see page 4 of the Calibration Manual (W450160)).
4. Go to “Menu 15 – Pressure” (see page 45 of the Calibration Manual (W450160)) to view both sensor pressures and nett pressure.
5. Check the PRESSURE values of both sensors. They should be between -75 and + 75 PSI. If not, replace the computer unit.
6. Check the NETT pressure. This should be between -35 and +35 PSI. If not, replace the computer unit.

Replacing The Computer Unit

When changing the computer unit, it is strongly recommended that the system chip be replaced at the same time. This ensures that the latest version of the chip is installed and guarantees that problems that may be caused by the existing chip are eradicated.

Computer Removal

1. Boom down all of the way so that the boom hoist cylinder is fully retracted or the boom is firmly in the boom rest.
2. Disconnect hydraulic connections at the computer unit.
3. Note which hose is connected to the piston and rod pressure ports.
4. Disconnect both electrical connectors at the computer unit.
5. Remove the hardware securing the computer to the cab wall.

Computer Installation

1. Ensure that the correct system chip is installed in the computer.
2. Secure the computer unit to the cab wall with the mounting hardware.
3. Ensure that the electrical connections face downward.
4. Remove the two protective covers from the electrical bulkhead connector.
5. Connect the electrical connectors.
6. Remove the protective caps from the hydraulic ports.
7. Connect the base-side pressure hose to the piston pressure port.
8. Connect the rod-side pressure hose to the rod pressure port.

Power Up And Calibration

1. Switch the crane power on and check that all LED check lights within the computer unit are illuminated. Ensure that the COMMS LED is flashing and that the display console is operating.
2. Enter calibration mode (see page 4 of the Calibration Manual (W450160)).

⚠WARNING

TO PROTECT AGAINST UNWANTED DATA LOSS, WHICH CAN OCCUR DURING THE SAVE OR INITIALIZATION PROCESS, REMEMBER THAT IT IS POSSIBLE TO ABORT AN ACTION AS LONG AS IT HAS NOT BEEN FINALIZED. A CALIBRATION HAS NOT BEEN FINALIZED UNTIL THE OPERATOR GIVES THE OK TO CALIBRATE.

3. Reset the crane data. Refer to “Menu 01 – Crane Data” on page 12 of the Calibration Manual (W450160).
4. Fully retract the boom; using an inclinometer, set to zero degrees.
5. Go to “Menu 02 – Zero Sensor” (see page 14 of the Calibration Manual (W450160)). Zero the extension sensor (no. 2).
6. Zero the angle sensor (no. 3).
7. Boom up to a high angle and measure the angle with an inclinometer.
8. Go to “Menu 03 – Span” (see page 17 of the Calibration Manual (W450160)). Calculate and enter the span (no. 2)

9. Fully retract the boom and ensure that the crane upper is set at the IN-LINE, OVER FRONT position with the house-lock engaged.
10. Go to “Menu 04 – Swing Pot Zero” (see page 20 of the Calibration Manual (W450160)). Zero the swing sensor.
11. Check swing direction. Release the house-lock and swing to the right. If the value reduces while swinging to the right, change the swing direction.
12. Exit calibration mode and perform the following checks:

Checks

1. With an inclinometer, check the accuracy of the boom angle and the radius measurements and tape at four or five points.
2. Ensure that the hydraulic connections are secure and not leaking at the computer unit.
3. Secure the computer lid and rain cover.

Display Console

Display Console Overview

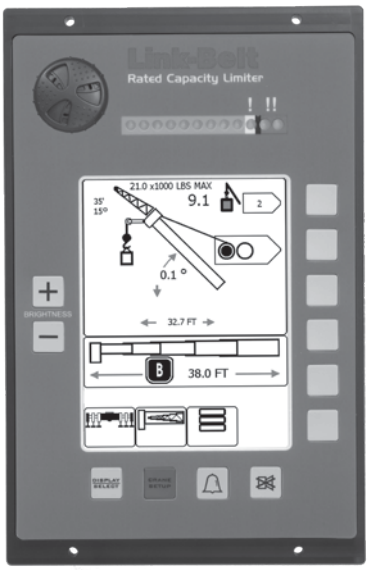

The operator's display console allows the user to see the crane values (angle, radius, load, etc.) and crane configuration selection. The display also provides calibration functions used for testing and fault diagnosis.

Checking The Display Console

The operator's display console is normally very reliable. However, when operated for extended periods, under extreme conditions, the console can become damaged. The damage is not always apparent. To help identify subtle faults that are sometimes difficult to find, or that may be attributed, mistakenly, to other kinds of problems, please review the following comments.

Reading The (Liquid Crystal) Displays

Always adjust the display contrast first. The most commonly encountered problem is caused by reflections or bright light conditions. It may not be possible to correct this problem completely, especially on flush-mounted display consoles exposed to bright sunlight. If the problem concerns the contents of one or more of the display screens, refer to "Display Console Problems" on page 6.

Buttons That Don't Respond

All button options are not available for use at all times. Ensure that the non-responsive button is programmed to respond at that point in the operation of the System. Press the button in the center. Pressing the printed symbol 'at one end' may not activate the switch underneath. Buttons that are damaged or have a surface that is worn may cause the switch underneath to operate improperly. In this case, refer to "Display Console Removal and Installation" on page 25.

Connectors

A single circular connector, common to all display models, is positioned on the rear of the display console. This connector carries power and signals from the computer unit to the display console. Examine this connector carefully. It is possible for the pins and sockets within the connector halves to bend, break, or 'be pushed back' inside the housing. An additional connector, next to the circular connector, is also present. The horn drive wire is a single black lead that should be attached to the black terminal on the rear of the display console housing.

Moisture

The display console offer adequate protection against dust and water, when correctly installed. However, they are unlikely to fully protect the sensitive electronic assemblies inside against pressure-washing or heavy rainfall. In this case, replace the console, especially if moisture is visible behind the display windows.

Display Console Removal and Installation

Removal

1. Remove and set aside the four mounting screws on the defective operator's display console.
2. Disconnect the cable from the connector on the rear of the defective operator's display console.

Installation

1. Attach the electrical cable and horn wire to the electrical connector on the new console.
2. Attach the new display console to the cab with the four mounting screws.

Compact Flash Card

The system runs a version of Microsoft® WIndows and the crane operation program is stored on a compact flash card which is stored in a slot in the display console. In some cases, the CF card may become dislodged or corrupted and will need to be re-inserted or replaced.

Removal and Installation

1. Follow the procedure described in "Display Console Removal and Instalaltion" on this page.

2. Remove the CF card slot cover. It is attached magnetically so no tools are required.

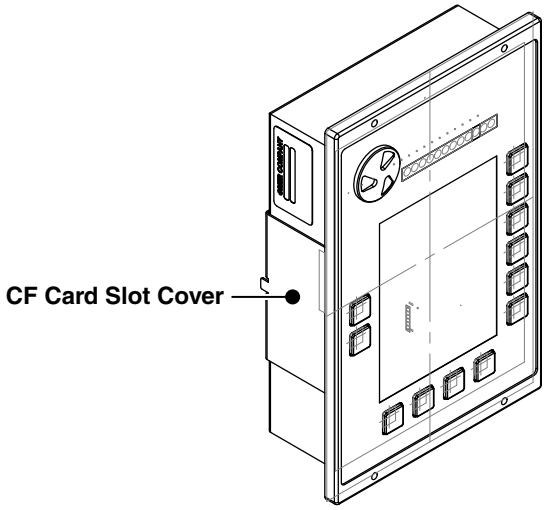

3. The CF card slot employs a “push-push” mechanism to remove and insert the CF card. Do not use any tools to remove the card. To remove the card, push slightly on the card until a click is heard. Then release the card and it will pop out.

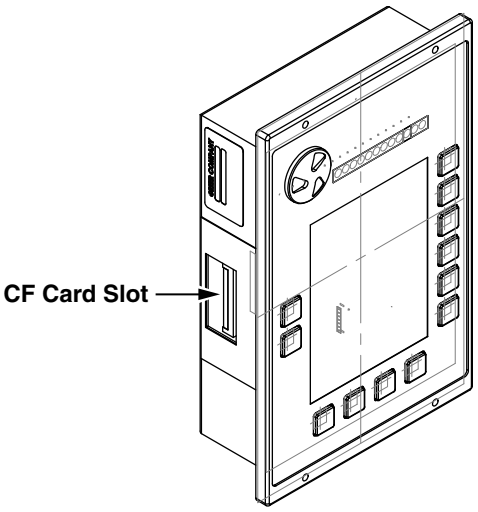

4. You can then remove the card completely.

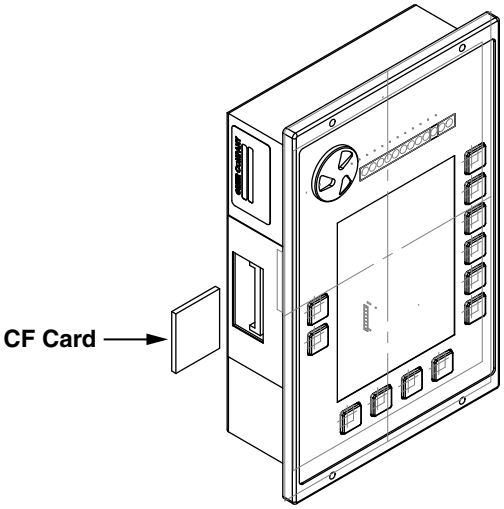

5. To re-insert the card, or to insert a new card, slide the card into the slot in the proper direction and orientation. The card can only be inserted one way. Do not try to force the card into the slot.
6. Push slightly on the card until a click is heard. Then release the card and it will lock into the slot.

Remote Load Indicator

Remote Load Indicator Overview

The remote load indicator displays the percentage of rated capacity of the crane. The remote load indicator is mounted at the top of the cab front window, in the operators line of sight. User-selectable levels of brightness are available on the device, which is designed for reading under all lighting conditions. Defective remote load indicators cannot be serviced.

The remote load indicator is optional and is not used on all cranes.

Checking The Remote Load Indicator

The remote load indicator is normally very reliable. However, when operated for extended periods, under extreme conditions, the device can become damaged. The damage is not always apparent. To help identify subtle faults that are sometimes difficult to find, or that may be attributed, mistakenly, to other kinds of problems, please review the following comments.

Lamps

The lamps are light emitting diodes (LED's). They are more reliable than standard incandescent bulbs and consume far less power. LED operation can be checked at any time by the operator by pressing the test button on the operator's display console. Always replace the entire load indicator unit if it is found to be faulty.

With the system powered, there should always be at least one (green) LED lighted – the one farthest from the brightness control push button, even when there is no load suspended. The remote load indicator LED's should 'track' or 'echo' the load indicator on the operator's display console at all times.

Brightness Control

There are four levels of brightness. Holding the brightness control button continuously will cause the unit to automatically 'cycle' through the available levels. Release the button at any time to select the desired setting. Alternately pressing and releasing the button will cause the cycle to progress through the four levels in sequence. It is not possible to 'switch-off' the LED's using this control.

The currently selected brightness level is not stored within the system when the power is switched off. Therefore, the brightness desired will have to be set again manually when the System is next used. The remote load indicator always starts with the LED's set to maximum brightness.

Cable and Connector

The remote load indicator uses a single cable to communicate with the computer unit and to carry power. The cable is nonremovable and is a fixed length. Excess cable should be stored (not discarded) when the unit is installed. Extending this cable is not recommended.

There is a single connector on the far end of this cable. This connector carries power and various signals between the computer unit and the remote load indicator. Because of the nature of connectors, it is possible for the pins and sockets within the connector halves to be damaged. A pin may be bent, broken, or 'pushed back' inside the housing.

Moisture

The remote load indicator offers adequate protection against dust and water when correctly installed. It is not possible, however, to fully protect the sensitive electronic assembly inside against pressure-washing or heavy rainfall. If this occurs, the remote load indicator should be replaced.

Remote Load Indicator Replacement

- Removal

1. Turn off the power.
2. Remove the display console in order to access cabling in connectors.
3. Disconnect the remote load indicator cable from the display console wire harness at the rear of the display console.
4. Remove the remote load indicator from its bracket by loosening and removing the knob at each end of the remote load indicator. Retain the knobs for reuse.

- Installation

1. Put the new remote load indicator in position. Reconnect and tighten the two knobs.
2. Route the cable to the display console and connect the cable.
3. Turn on the power and ensure that the remote load indicator operates correctly.

Extension Reel

Extension Reel Overview

The primary operation of the EXTENSION REEL is to measure the extension of the telescoping sections of the main boom. The extension reel also includes an angle sensor to measure the main boom angle, and an electrical slip-ring which transfers the Two-Block signal from the reel-off cable to the system computer.

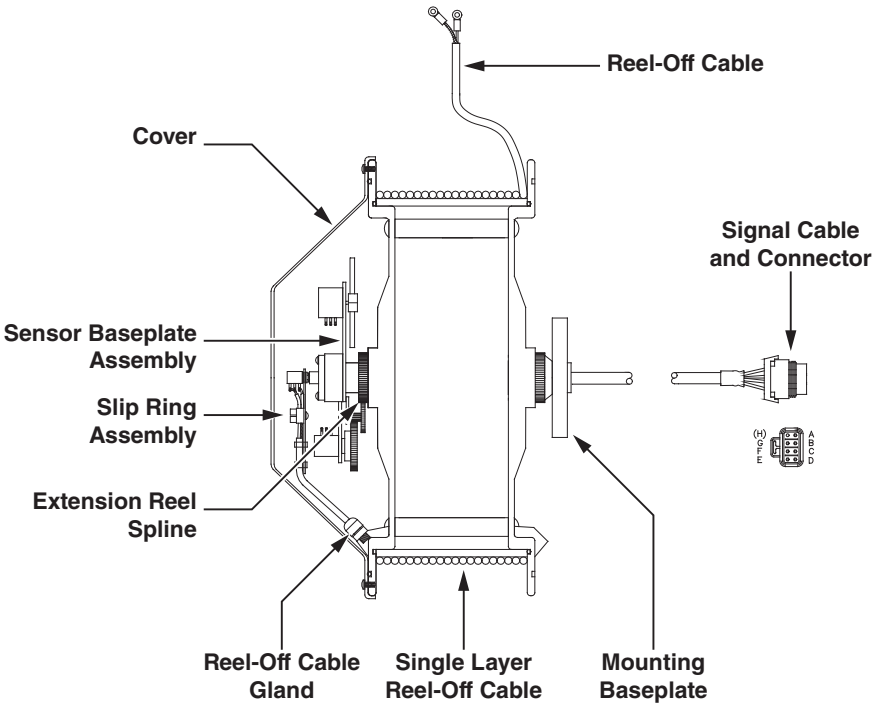

The extension reel is designed to provide a very accurate measurement of extension and angle. It is important that the setting up and maintenance of these devices be properly carried out as per the procedures contained within this manual. Incorrect maintenance will result in system calculation errors.

Checking the Reel-Off Cable Layering

The extension reel is designed to provide accurate measurement of boom extension when the REEL-OFF CABLE forms a single flat layer across the surface of the extension reel as the boom is telescoped in and out. Any stacking of the cable will cause extension errors as the boom retracts.

1. Telescope the boom fully out and then fully in.
2. Check that the reel-off cable forms a flat single layer across the surface of the extension reel, with each successive turn of cable laying next to the last.

If any stacking or build up of the cable occurs, make sure that the first cable guide at the top of the boom root section is correctly aligned with the outside edge of the extension reel.

Clean the reel-off cable; then lubricate it with a silicone oil.

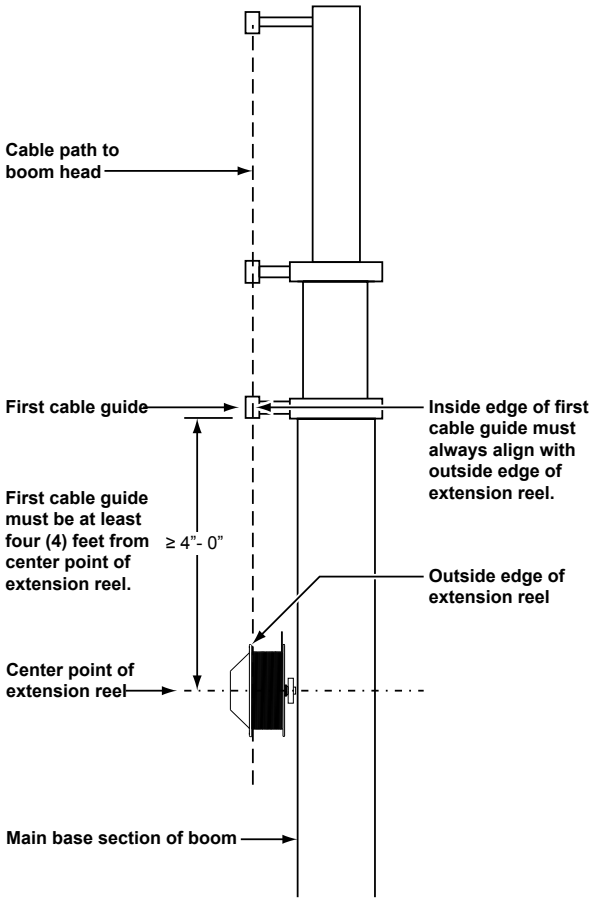

Checking The Extension Sensor Drive Voltage

1. Remove the extension reel cover.
2. Using a digital voltmeter, measure the voltage between the RED (TB1-4) and BLUE (TB1-1) wires at the terminal block mounted on the sensor baseplate assembly.
3. Check that the voltage is between 4.7 and 5.3 volts.

Voltages outside the range specified above will indicate an interconnection problem between the extension reel and the computer or, a short circuit within the extension reel. Check extension reel wiring within the reel and at connector J305.

Checking The Boom Extension Sensor Voltage

1. Fully retract the boom.
2. Remove the extension reel cover.
3. With a digital voltmeter, measure the voltage between the BLUE wire (TB1-1) and the WHITE wire (TB1-3).
4. With the boom fully retracted, the voltage should be between 0.1 and 0.3 volts. If the voltage is incorrect, refer to “Extension Sensor Setup” on this page.
5. Still measuring the voltage at the same points, telescope the boom out and check that the potentiometer is operating by verifying that the voltage increases.

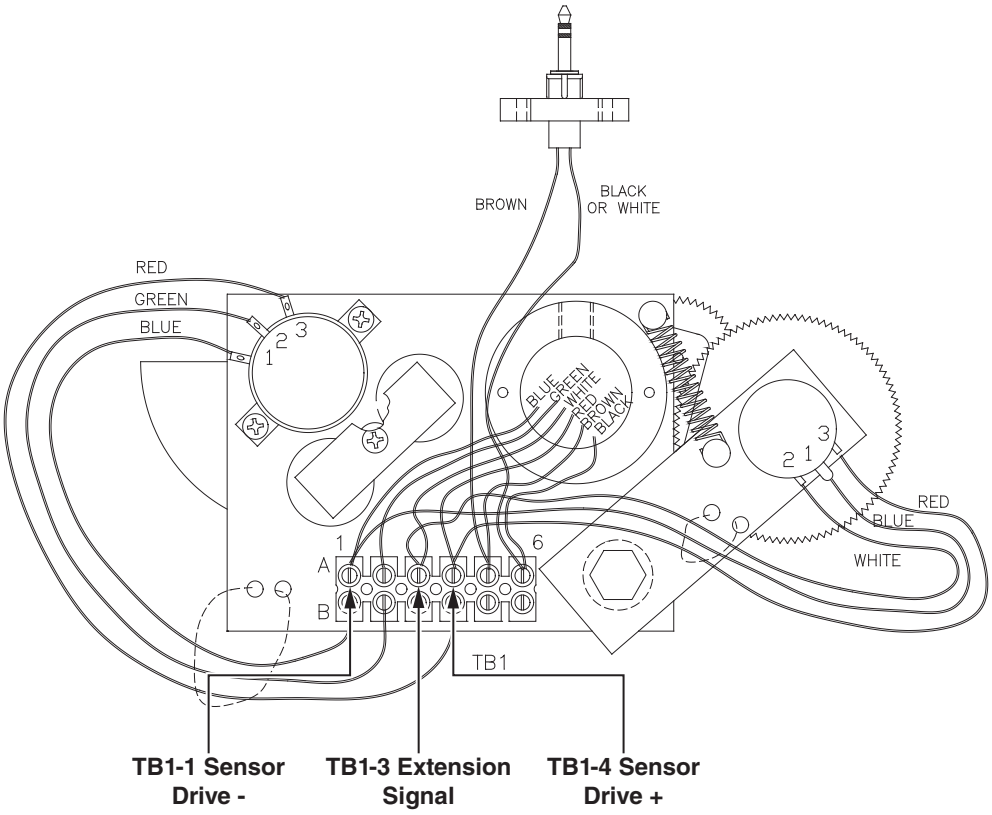

Extension Sensor Setup

The following procedures define how to reset and calibrate the extension sensor, if necessary. Before any of these procedures are used, check that the reel-off cable is layering correctly, refer to “Checking the Reel-Off Cable Layering” on page 29.

Physical Zero

It is necessary to ensure that the extension sensor potentiometer is correctly set to its minimum "zero" setting when the boom is fully retracted. This ensures that the sensor will correctly measure over the full telescoping range of the boom.

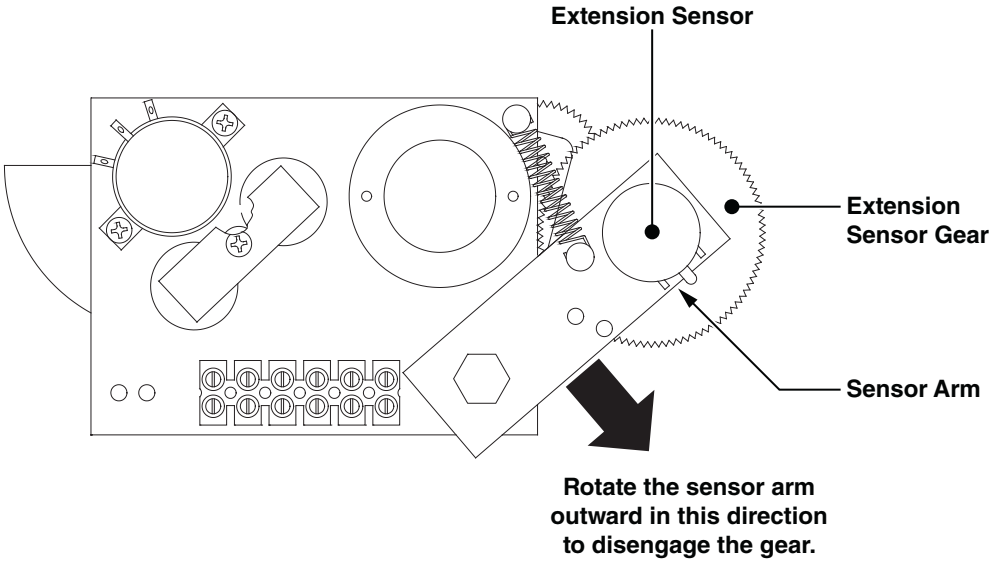

1. Fully retract the boom.
2. With the cover of the extension reel removed, disengage the maingear wheel connected to the extension sensor by pulling the sensor arm in the direction shown.
3. Turn the potentiometer until you feel some resistance indicating you are at the end. Then adjust the potentionmeter until the desired reference voltage is reached.
4. Measure the voltage between TB1-3 and TB1-1.
5. Rotate the gear counterclockwise about half a turn setting the voltage to 0.2 volts. Then, carefully release the sensor arm, ensuring that the voltage remains at 0.2 volts as the gears re-engage.

Zero Calibration

The computer must identify where the zero point of the extension sensor has been set. It is therefore necessary to calibrate the zero setting of the potentiometer. Refer to "Menu 02 – Zero Sensor" on page 14 of the Calibration Manual (W450160).

Before continuing, ensure that the mechanical zero has been properly set. Refer to "Physical Zero" on this page.

1. Fully retract the boom.
2. Enter calibration mode (see page 4 of the Calibration Manual (W450160)).
3. Go to "Menu 02 – Zero Sensor" (see page 14 of the Calibration Manual (W450160)). Zero the extension sensor (no. 2).
4. Before exiting the command, ensure that the displayed value is between -4 and +4.

Span Calibration

The computer must be able to treat measurements of distance provided by the extension sensor. It is therefore necessary to calibrate the span of the extension potentiometer. Refer to "Menu 03 – Span" on page 17 of the Calibration Manual (W450160).

Before continuing, ensure that the calibration zero has been properly set. Refer to “Zero Calibration” on page 31.

1. Fully extend the boom.
2. Enter calibration mode (see page 4 of the Calibration Manual (W450160)).
3. Go to “Menu 03 – Span” (see page 17 of the Calibration Manual (W450160)). Calculate and enter the span (no. 2)
4. Fully retract the boom and ensure that the crane upper is set at the in-line, over front position with the house-lock engaged.
5. Before exiting the menu, check that the displayed value is within +/– 0.2 of the extension value calculated previously.

Checking The Angle Sensor Pendulum

The angle sensor uses a copper pendulum, mounted behind the sensor assembly. In order to stop the pendulum from swinging uncontrollably during movements of the boom, two magnets provide damping.

If problems with the angle sensor are suspected, check that the pendulum and potentiometer are operating without restriction, before continuing to check electrical operation and performing any calibration.

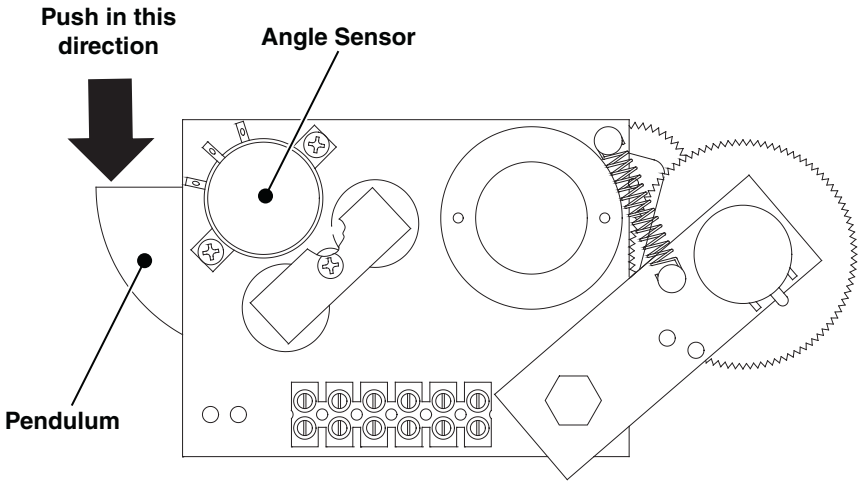

1. Remove the extension reel cover.
2. Locate the pendulum.
3. Push the pendulum downwards in the direction shown and ensure that it doesn’t feel as if it is sticking. Some resistance of movement may be encountered as the pendulum is moved; however, this is due to the magnets that provide the damping.
4. Release the pendulum and make sure that it returns with free, but controlled movement, directly back to its original position.
5. Push the pendulum downwards a few more times, checking that it returns, each time, to its starting position.

IMPORTANT!

IF ANY “STICKING” OF THE PENDULUM IS ENCOUNTERED WHILE PERFORMING THE ABOVE CHECKS, ENSURE THAT THERE ARE NO WIRES TOUCHING THE PENDULUM, OR THAT OTHER OBVIOUS PROBLEMS ARE PRESENT. IF NOT, IT WILL BE NECESSARY TO REPLACE THE SENSOR ASSEMBLY.

Checking The Angle Sensor Drive Voltage

1. Remove the extension reel cover.
2. Using a digital voltmeter, measure the voltage between the RED (TB1-4) and BLUE (TB1-1) wires at the terminal block mounted on the sensor baseplate assembly.
3. Check that the voltage is between 4.7 and 5.3 volts.

Voltages outside the range specified above will indicate an interconnection problem between the extension reel and the computer or, a short circuit within the extension reel. Check extension reel wiring within the reel and at the boom foot base connector.

Checking The Angle Sensor Voltage

1. Using an inclinometer for verification, place the main boom at a 0° (zero) angle; then remove the extension reel cover.
2. With a digital voltmeter, measure the voltage between the BLUE wire (TB1-1) and the GREEN wire (TB1-2). With the boom horizontal, the voltage should be between 0.3 and 0.5 volts. If the voltage is incorrect, refer to "Angle Sensor Setup" on page 34.
3. Still measuring the voltage at the same points, move the exposed side of the angle sensor pendulum downwards, and check that the potentiometer is operating by verifying that the voltage increases.
4. Check that the pendulum moves freely, and when released, falls smoothly back to the original 0° (zero) voltage reading, as measured previously.

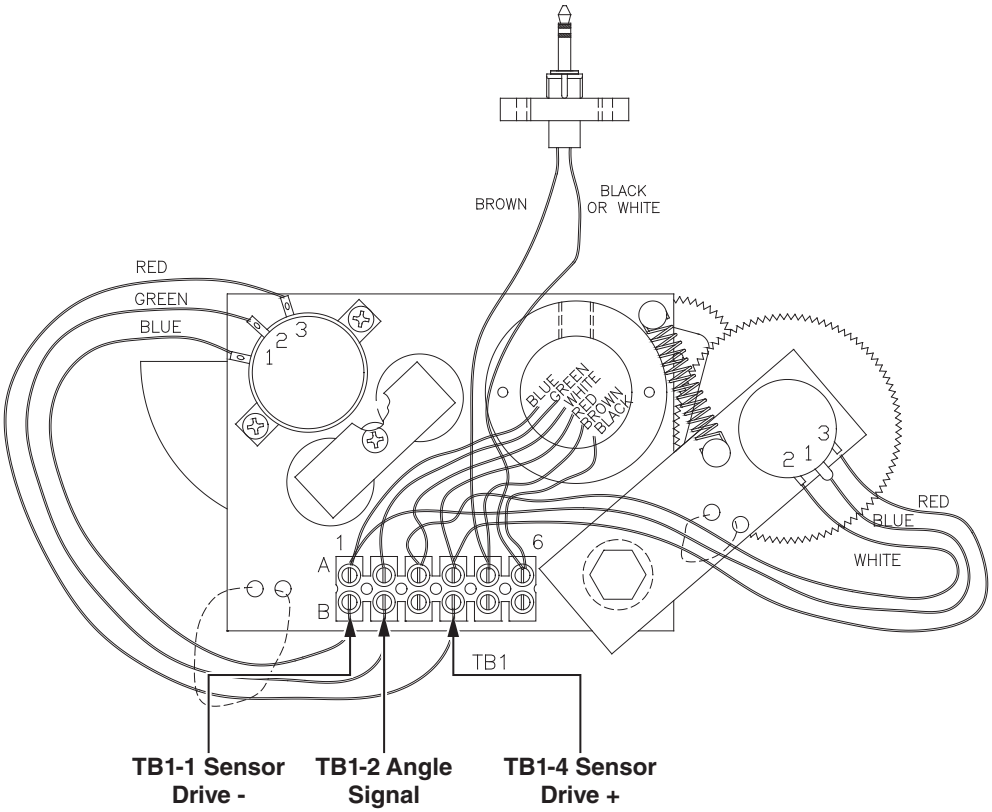

Angle Sensor Setup

The following procedures define how to reset and calibrate the angle sensor.

Physical Zero

It may be necessary to ensure that the angle sensor potentiometer is correctly set to its physical "zero" setting with the boom at 0° (ZERO). This ensures that the sensor will correctly measure the full angle range of the boom.

1. Using an inclinometer, set the boom to 0° (ZERO).
2. Loosen the two securing screws on either side of the sensor potentiometer just enough to allow the sensor potentiometer to be turned by hand. Do not remove the screws and do not put pressure on the terminals exiting the sensor.
3. Measuring the voltage between TB1-2 and TB1-1 (see Figure 6.7), carefully rotate the potentiometer until the voltage measures 0.4 volts. Rotating the sensor counterclockwise will increase the voltage. Rotating clockwise will reduce the voltage. Only fine adjustments are required. Do not touch the pendulum hanging behind the sensor assembly, as this will affect the reading.
4. Tighten the securing screws and check that the voltage remains at 0.4 volts.

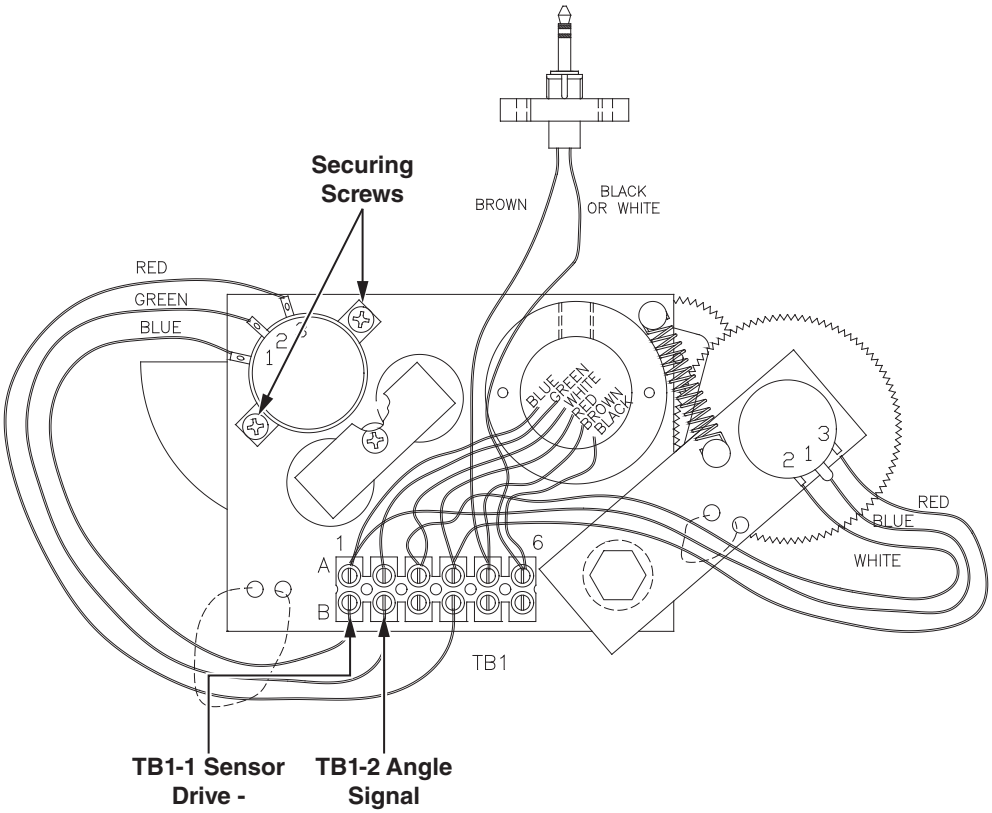

Zero Calibration

The computer must be able to identify where the ZERO point of the angle sensor has been set. It is, therefore, necessary to calibrate the zero setting of the potentiometer.

Before continuing, make sure that the mechanical (physical) zero has been properly set. Refer to "Physical Zero" on this page.

1. Using an inclinometer, set the boom to 0° (zero).
2. Enter calibration mode (see page 4 of the Calibration Manual (W450160)).

3. Go to “Menu 02 – Zero Sensor” (see page 14 of the Calibration Manual (W450160)). Zero the boom angle sensor (no. 3).
4. Before exiting the command, check that the displayed value is between -4 and +4.

Span Calibration

The computer must be able to treat measurements of the angle provided by the angle sensor. It is therefore necessary to calibrate the SPAN of the angle potentiometer.

Before continuing, ensure that the calibration zero has been properly set. Refer to Zero Calibration on page 34.

1. Boom up to a high angle (at least 70°) and measure the angle with an inclinometer.
2. Enter calibration mode (see page 4 of the Calibration Manual (W450160)).
3. Go to “Menu 03 – Span” (see page 17 of the Calibration Manual (W450160)). Calculate and enter the span (no. 3)
4. Fully retract the boom and ensure that the crane upper is set at the in-line, over front position with the house-lock engaged.

IMPORTANT!
THE REQUIRED ACCURACY OF MEASURED ANGLES IS WITHIN 0.2°.

WHEN TAKING BOOM ANGLE MEASUREMENTS; ALWAYS USE A GOOD QUALITY INCLINOMETER. MANY INCLINOMETERS ARE ONLY ACCURATE AT 0° (LEVEL). ENSURE THAT A RELIABLE POSITION ON THE TOP OF THE BOOM IS USED TO MEASURE THE ANGLE AND THAT THE INCLINOMETER WILL PROVIDE AN ACCURATE READING AT 0° AND AT 70°.

5. Before exiting the command, check that the displayed value is between -0.1° and +0.1°.

Extension Reel Replaceable Parts

The extension reel is field-serviceable in every respect except for the spring chamber/extension reel surface and shaft assembly. Failure of the recoil spring, damage to the shaft or reel surface and side plates requires complete replacement of the extension reel.

The following parts of the extension reel, are field-replaceable:

- Extension/reel-off cable assy
- Slip-ring assembly
- Sensor baseplate assembly
- Cable tail assembly (signal cable)
- Cover

Extension Reel-Off Cable

The extension reel-off cable, running from the extension reel to the main boom head, carries the Anti Two-Block signal from the switches at the main boom head, aux head and erected jib/fly. The cable is made from stainless steel wire and a durable outer sheath. Damage to the cable will often result in bad Two-Block signals or bad measurement of boom extension. If the cable has been broken or damaged in any way, it can be field-replaced.

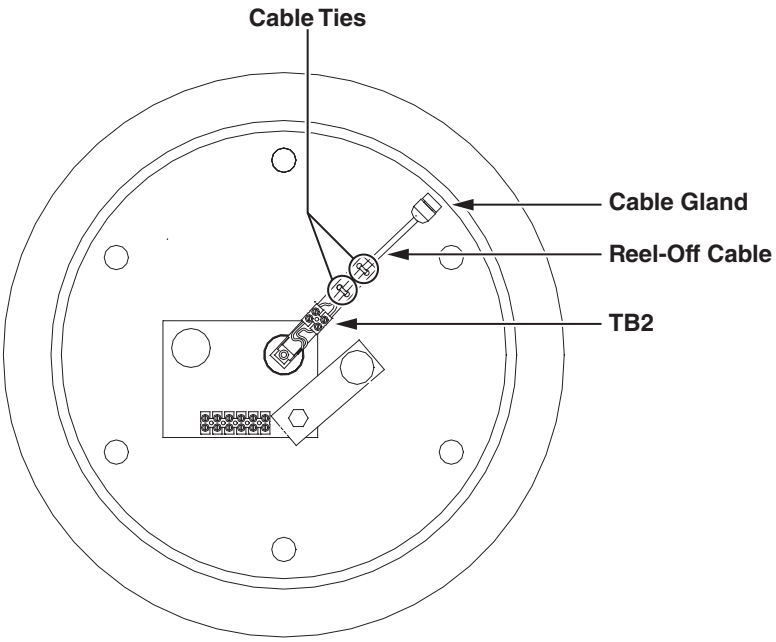

Removal

1. Fully retract and lower the boom. Then, disconnect the REEL-OFF CABLE from the Anti Two-Block switch or connector.
2. Gripping the cable firmly, release it from the tie-off post.
3. Continue to grip the cable firmly while allowing it to fully wind back onto the extension reel.
4. Remove the extension reel cover.
5. Cut the 2 tie-wraps that secure the extension reel-off cable to the slip-ring support arm.
6. Unscrew the extension reel-off cable from the terminal block on the slip-ring support arm.
7. Loosen the gray cable gland mounted on the cheekplate.
8. Pull the existing extension reel-off cable out through the cable gland.

Installation

1. Loosen the strain relief on the cheekplate and feed the EXTENSION REEL-OFF CABLE through the wall of the cheekplate. Leave enough slack to work easily with the cable.
2. If not already stripped, remove 1" of the outer jacket of the cable with an X-ACTO knife.
3. Unravel the stainless steel braid and twist it into a single wire.
4. Remove 1/4" insulation from the center wire. The insulation bonded to the center wire is difficult to remove. Remove small increments about 0.1" at a time with wire strippers.
5. Connect the extension reel-off cable to TB2 on the arm of the slip-ring. The braided wire connects to the black wire and the center core connects to the brown wire. Using two cable ties, tie the cable to the arm of the slip-ring.
6. Secure the extension reel-off cable to the arm of the slip-ring with 2 tie-wraps.
7. Adjust the cable to bend slightly from the strain relief to the slip-ring. Rotate the extension reel. Ensure that the path of the new cable is unimpeded; then, tighten the strain relief.
8. Wind the extension reel-off cable onto the extension reel in a single layer.
9. Set pre-tension (5 turns counterclockwise). Thread the extension reel off-cable through the

cable guides. Attach the cable to the boom tie-off-post and connect it to the Anti Two-Block switch.

10. Refer to "Extension Sensor Setup" on page 30 to set the potentiometer zero. Recalibration of the extension span should not be necessary.

11. Fully telescope the boom in and out at least twice, ensuring that the reel-off cable remains in a single flat layer on the drum surface and the length display on the display console is accurate with a fully extended or fully retracted boom. Any stacking of the cable on the extension reel surface will cause measurement errors. If this is the case, it may be necessary to check that the first cable guide aligns correctly with the outside edge of the extension reel surface.

12. Reinstall the cover of the extension reel, ensuring that the "o" ring on the inside of the extension reel is intact.

Slip-Ring Assembly

The main purpose of the SLIP-RING ASSEMBLY is to provide an electrical path for the feed and switch signal return, between the Two-Block switch and the system computer.

It is unlikely that the slip-ring assembly should ever require repair or replacement. If such an event arises, however, both the upper and lower halves of the slip-ring assembly must be replaced at the same time.

Failure of the slip-ring assembly will most likely result in a continuous Two-Block alarm. For information on testing and checking the slip-ring assembly, refer to "Anti-Two-Block Function" on page 41.

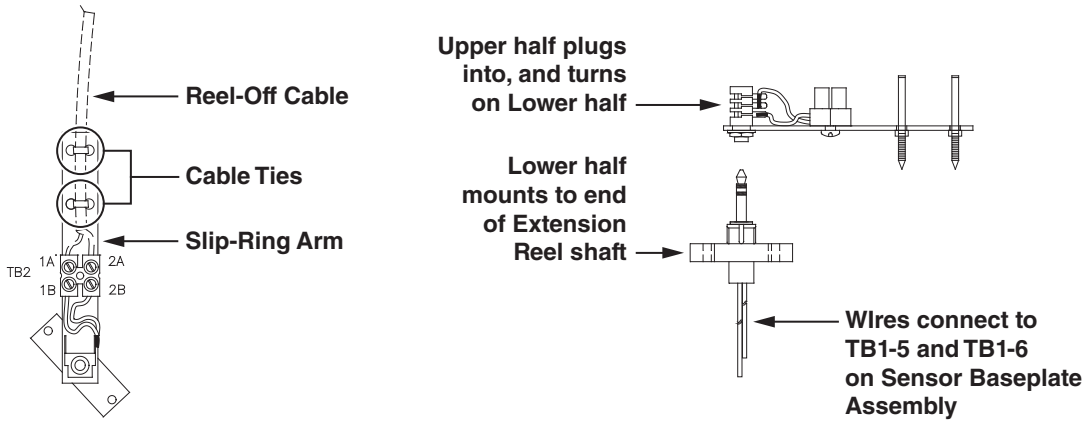

- Removal

1. Remove the extension reel cover.
2. Holding the reel-off cable on the arm of the slip-ring, cut the tie wraps.
3. Unscrew the reel-off cable from TB2 on the arm of the slip-ring.
4. Unscrew both Phillips screws that hold the lower half of the slip-ring on the shaft; remove the slip-ring.
5. Disconnect the two wires connecting the lower half of the slip-ring assembly at TB1-5 and TB1-6 on the sensor baseplate assembly.

- Installation

The new SLIP-RING ASSEMBLY is pre-lubricated with grease. Do not wipe off lubrication.

1. Attach the brown slip-ring wire from the lower half of the new slip-ring to TB1-5 on the sensor baseplate assembly. Make sure that the brown signal wire is also correctly connected.
2. Attach the black (or white) slip-ring wire from the lower half of the new slip-ring to TB1-6 on the sensor baseplate assembly. Make sure that the black signal cable wire is also correctly connected.
3. Screw the bottom half of the slip-ring to the shaft with the two Phillips screws, making sure that wires exiting through the center of the shaft are not trapped.
4. Connect the extension reel-off cable to TB2 on the arm of the slip-ring. The braided shield connects to the slip-ring TB2 black wire and the center of the cable connects to the slip-ring TB2 brown wire.
5. Secure the extension reel-off cable to the arm of the slip-ring with two cable ties.
6. Ensure that the slip-ring is plugged in all the way.
7. Replace the extension reel cover.

Sensor Baseplate Assembly

The SENSOR BASEPLATE ASSEMBLY supports both the extension and angle sensors and provides interconnection between the sensors, the Two-Block switch signal to the slip-ring, and the signal cable to the system computer.

Electrical or mechanical failure of either the angle sensor or the extension sensor potentiometers may not be field-repaired, since the angle sensor pendulum is factory set on the potentiometer shaft, and the extension potentiometer gear contains a protection clutch which is difficult to replace in the field. In the event of failure of either of these items, the whole sensor baseplate assembly must be replaced.

The terminal block (TB1), mounted on the assembly, provides wiring connection for all internal parts of the extension reel, and the signal cable connecting the reel to the system computer. Most electrical diagnoses of the boom sensors may be made at this terminal block.

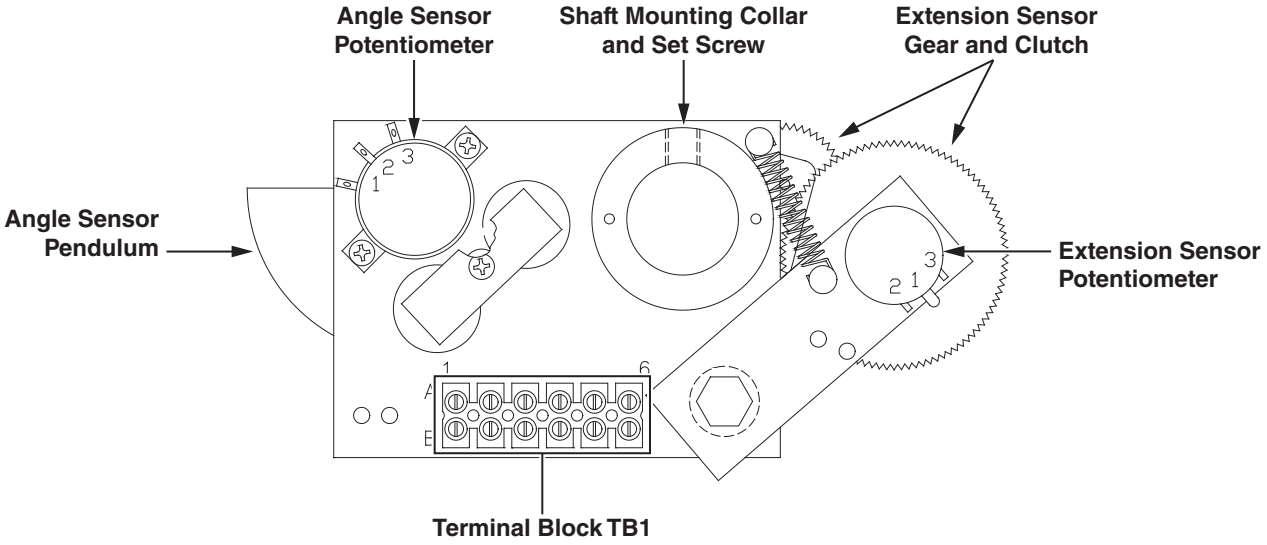

Removal

1. Remove the cover on the extension reel.
2. Unscrew the screws holding the slip-ring to the mounting ring of the SENSOR ASSEMBLY.
3. Disconnect the brown and black wires.

4. Disconnect the signal cable wires to terminal block TB1.
5. Using a 5/32" Allen wrench, loosen the set-screw that holds the baseplate on the shaft.
6. Remove the sensor assembly.

Installation

Place the boom in a horizontal position when installing the SENSOR ASSEMBLY.

1. Feed the wires coming out of the main shaft through the mounting collar on the sensor assembly.
2. While pulling both extension sensor gears out, against the spring, slide the sensor assembly onto the shaft until the top of the shaft aligns with the top of the mounting collar. Align the top edge of the assembly parallel with the boom.
3. Tighten the set-screw and release the gears allowing them to mesh with the extension reel spline. Route the wires to the terminal block and hook up the wires, as indicated.
4. Tuck the unconnected remaining yellow and orange wires down into the shaft.

Sensor Assembly Terminal Block Wiring						
Terminal	TB1-1	TB1-2	TB1-3	TB1-4	TB1-5	TB1-6
Wire Color	Blue	Green	White	Red	Brown	Black
Signal	Sensor Drive -	Angle	Extension	Sensor Drive +	ATB Signal	ATB Feed

5. Screw the slip-ring assembly to the baseplate of the sensor assembly.
6. Connect the brown wire on the slip-ring assembly to TB1-5; connect the black wire to TB1-6. Strip wires, if not already stripped.

IMPORTANT!
ENSURE THAT THE WIRES LAY FLAT. ENSURE THAT THERE WILL BE ENOUGH SPACE TO ALLOW THE SLIP-RING ARM TO FREELY ROTATE.

7. Check the wiring and then follow the procedures to set up both the angle and extension sensors.

Signal Cable Assembly

The signal cable assembly provides interconnection between the extension reel sensors, the Two-Block switch and the system computer.

- Removal (from boom)

1. Fully lower and retract the boom.
2. Disconnect the extension reel cable from the anti two-block switch.
3. Gripping the extension reel cable firmly, remove it from the tie-off post.
4. Maintain a firm hold on the extension reel cable as the cable unwinds back onto the reel.
5. Secure the end of the extension reel cable to prevent unwinding.
6. Disconnect the signal cable at the distal end.
7. Unbolt the extension reel from the crane with a wrench.

- Removal (from extension reel)

1. Remove the cover from the extension reel.
2. Remove the slip-ring on the baseplate of the sensor assembly.
3. Disconnect all wires from the sensor assembly EXCEPT for the 6 wires leading to the angle and extension sensor potentiometers.
4. To protect the sensors within the extension reel, use two screws to temporarily reattach the cover of the extension reel.
5. Turn over the extension reel with cover attached, exposing the back of the device.
6. With the wires still disconnected, pull the SIGNAL CABLE out of the main shaft in the center of the reel. This cable has a strain-relief encircled with an "O"-Ring, creating a tight fit that seals out water.

IMPORTANT!
IF IT IS DIFFICULT TO REMOVE THE CABLE, USE THE INSERTION/EXTRACTION TOOL FROM THE FRONT OF THE EXTENSION REEL TO RELEASE THE CABLE.

- Installation

1. Unpack the new signal cable and ensure that the "o"-ring on the strain-relief is greased.
2. With the back of the extension reel still exposed, insert the end of the signal cable with the "O"-ring into the mounting plate and down the shaft in the center of the reel.
3. Seat the strain-relief, with attached "O"-ring, as follows, using the tool provided in the kit.
4. Bend the cable to the side. Position the hollowed-out section of the tool on the strain-relief plug at the top of the shaft.
5. With a hammer, gently tap the top of the tool forcing the strain-relief into proper position in the shaft. Continue to tap gently until the strain-relief plug will go no further.
6. Turn over the extension reel and remove the cover.
7. Connect the wires to the terminal block on the baseplate, as indicated below.

Sensor Assembly Terminal Block Wiring						
Terminal	TB1-1	TB1-2	TB1-3	TB1-4	TB1-5	TB1-6
Wire Color	Blue	Green	White	Red	Brown	Black
Signal	Sensor Drive -	Angle	Extension	Sensor Drive +	ATB Signal	ATB Feed

8. Tuck the unconnected remaining yellow and orange wires down into the shaft.
9. Connect the brown wire from the slip-ring assembly to TB1-5; connect the black wire to TB1-6. Strip wires, if not already stripped.
10. Screw the slip-ring assembly to the baseplate of the sensor assembly.

IMPORTANT!
ENSURE THAT THE WIRES LAY FLAT AND TOWARD THE TERMINAL CONNECTORS, AS SHOWN IN FIGURE 6.1. ENSURE THAT THERE WILL BE ENOUGH SPACE TO CLEAR THE WIRES WHEN THE ARM OF THE SLIP-RING ROTATES.

11. Replace the cover on the extension reel; reinstall the extension reel.

Anti Two-Block (ATB) Function

Anti Two-Block Function Overview

This section describes fault diagnoses of the ATB detection circuit. For details of function kickouts (including the anti two-block kickout), refer to “Power, Kickout, and Boom Mode Outputs” on page 44.

The computer supplies a protected positive feed to the ATB switches at the boom/jib head via the extension reel signal cable, slip-ring, and extension reel-off cable. With the ATB weight hanging freely on the switch(es), the switch contact is closed and the signal return to the computer is high (6.25 volts). When the weight is lifted by the hook block, the switch contact is opened, and the computer will sense a low signal input (0 volts) from the ATB signal return.

Since the computer checks the protected feed voltage internally, the system is capable of detecting a short circuit of the feed (or the ATB signal return when the switch is closed) to the crane chassis. fault codes are defined in “Problem Finder” on page 6.

The ATB detection circuit is probably the most susceptible part of the system, since it is carried through so many of the system components. Often, most problems with this circuit may be identified through inspection of cables, switches, and the extension reel. Damage to these parts may result in continuous or intermittent ATB alarms.

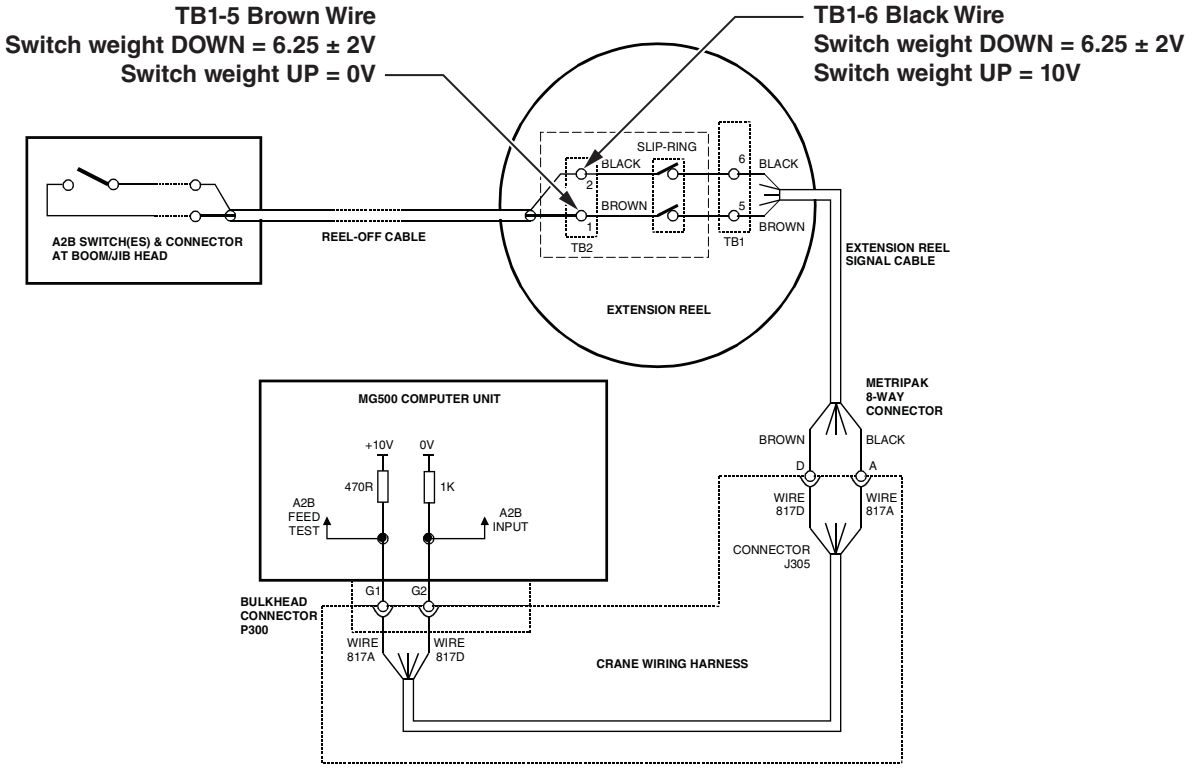

ATB Switch Configurations

This section details wiring schemes for ATB switches.

Rectangular Plug-In Connectors

Cranes fitted with rectangular style plug-in connectors do not have a MAIN/BOTH/JIB selector switch in the main boom head ATB switch.

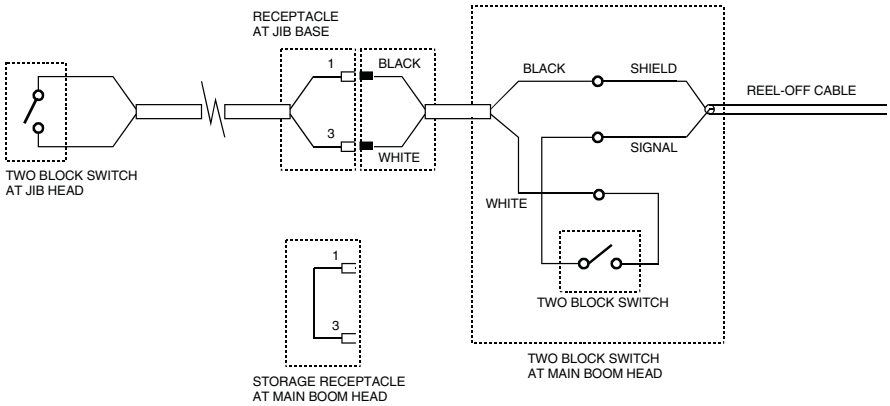

Checking The Extension Reel-Off Cable

The outer braid of the cable carries the ATB feed to the switches. If the cable sheath is damaged, this may cause a short circuit to the boom/chassis. If this is the case, a fault code above "B 8" will be indicated (see "Group "B" Fault Codes" on page 11). The same fault code will be indicated if the ATB switch is closed and the inner core of the cable is shorted to chassis at some point in the wiring.

- Carefully inspect the reel-off cable for wear.
- Check for signs of damage to the outer sheath of the cable.
- Check for any signs of severe "kinking" or crushing of the cable.

Checking The ATB Circuit

Before continuing, ensure that connectors are correctly connected to the ATB switches at the boom head/jib.

1. Remove the extension reel cover.
2. Disconnect the slip-ring arm from the plug by pulling it away from the center of the reel.
3. Close the ATB switch at the boom head by suspending the weight from it or pulling on the chain.
4. Measure the resistance between TB2-1 & TB2-2 terminal connections on the sensor arm.
5. With the ATB switch closed, the resistance should be less than 300 ohms. If not, this suggests that the reel-off cable, ATB switch, or one of the boom head connectors has an open circuit.

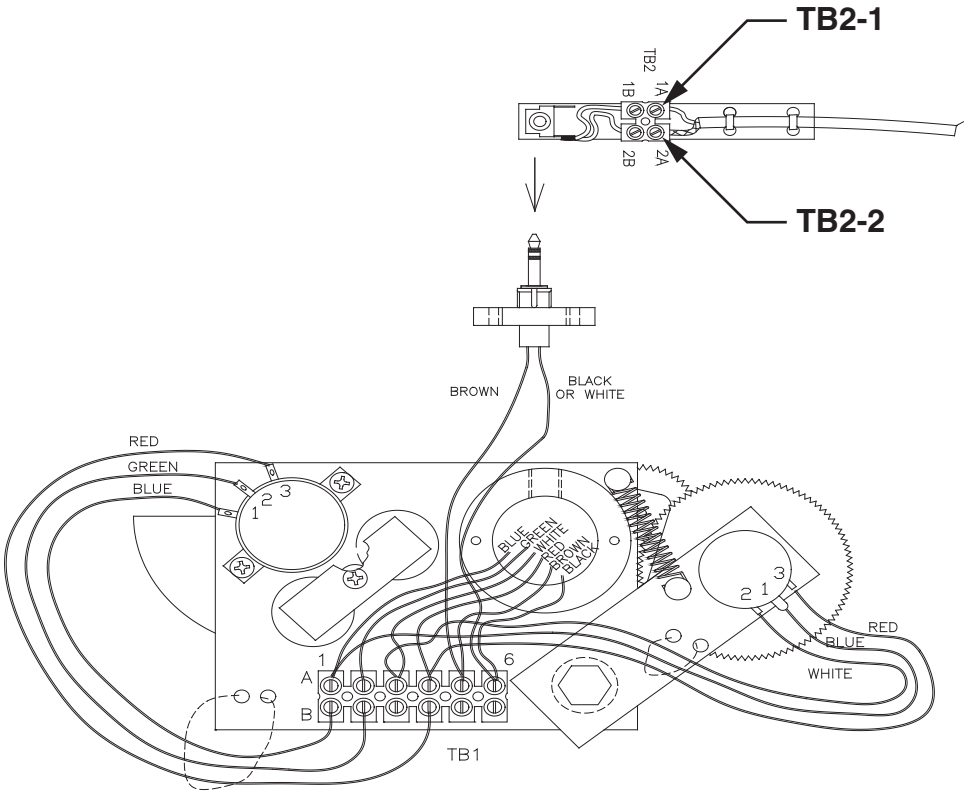

6. Open the ATB switch at the boom head by lifting the weight.
7. Measure the resistance between TB2-1 & TB2-2 terminal connections on the sensor arm.
8. With the ATB switch open, the resistance should be greater than 10,000 ohms. If not, this suggests that the reel-off cable, ATB switch, or one of the boom head connectors has a short circuit.

Power, Kickout, and Boom Mode Outputs

This section provides schematic outlines of outputs from the computer and is provided for information only. Since most of these functions are contained within the computer design and crane wiring harness, only limited fault diagnosis may be carried out. The FKO fuse (FS2) is described in “Computer Unit” on page 19.

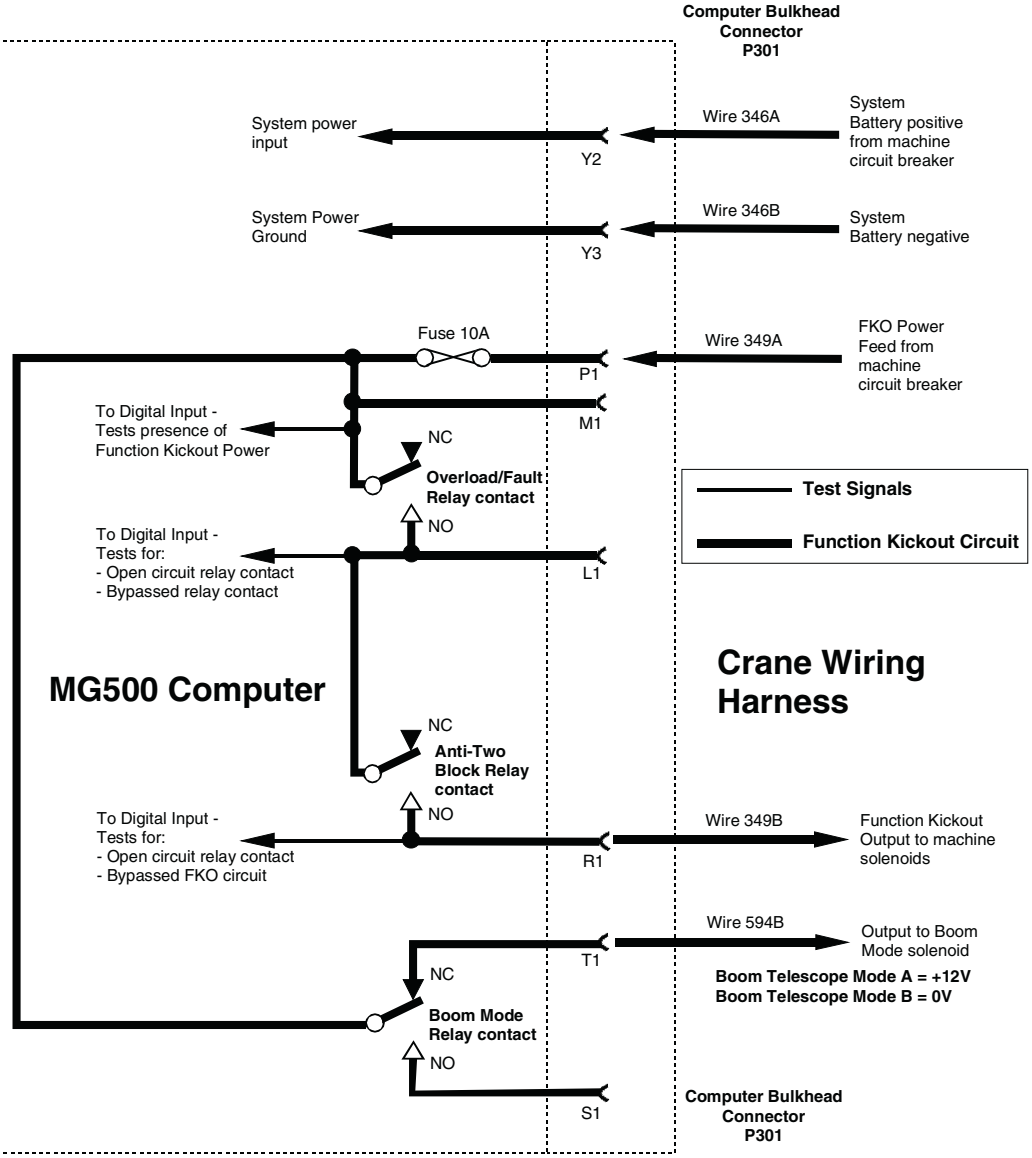

Swing Sensor

Swing Sensor Overview

The swing sensor measures the angle of the upper structure of the crane relative to its carrier. This angle is then used to select capacity charts and operator swing alarms/working area alarms.

In the event that the swing sensor fails, the computer will be unable to select a valid capacity chart.

For fault diagnosis, the swing sensor may be accessed by removing the cover of the collector at the cranes swing center.

For swing sensor replacement procedures, consult factory service.

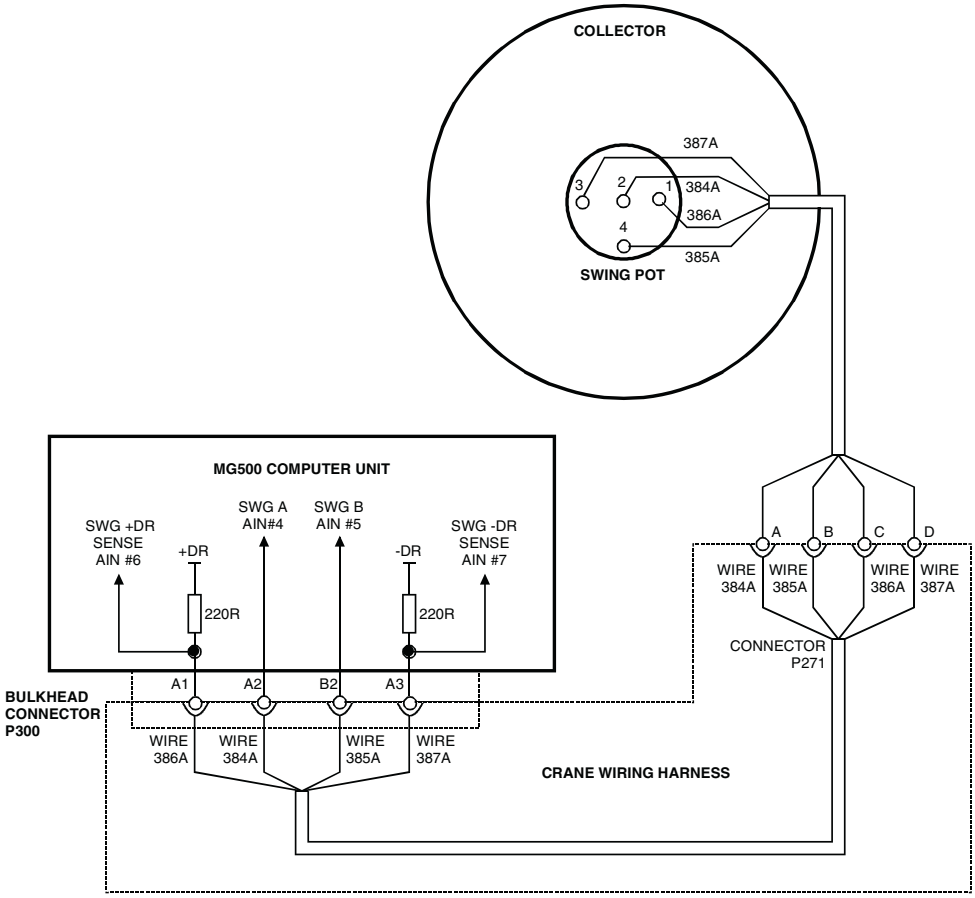

Checking the Swing Sensor Drive Voltage

1. Remove the collector ring cover to expose the swing sensor.
2. With the system power turned on, measure the voltage between terminal 1 of the swing sensor and crane ground. The voltage should be between 4.4 and 4.8 volts.
3. Measure the voltage between Terminal 3 of the swing sensor and crane ground. The voltage should be between 0.2 and 0.5 volts.

Voltages outside of those shown in steps 2 and 3 indicate a problem with the swing sensor or cabling connections. If voltages are incorrect, proceed to “Checking the Swing Sensor Reisistance” on page 46. If voltages are correct, proceed to “Checking the Swing Sensor Output Voltage” on page 46.

Checking The Swing Sensor Output Voltage

1. Remove the collector ring cover to expose the swing sensor.
2. With the system power turned on, measure the voltage between Terminal 2 of the swing sensor and crane ground. The voltage should be between 0.2 and 4.8 volts.
3. Measure the voltage between Terminal 4 of the swing sensor and crane ground. The voltage should be between 0.2 and 4.8 volts.

Voltages outside of those shown in steps 2 and 3 indicate a problem with the swing sensor or cabling connections. If voltages are incorrect, proceed to "Checking the Swing Sensor Resistance" on this page.

Checking The Swing Sensor Resistance

1. Disconnect the connector P271 (behind the collector ring).
2. Measure the resistance between pins C and D of the connector on the swing sensor side. The resistance should be between 2200 and 2800 ohms.
3. Measure the resistance between pins A and B of the connector on the swing sensor side. The resistance should be between 1800 and 2300 ohms.

IMPORTANT!
RESISTANCES OUTSIDE OF THOSE SHOWN IN STEPS 2 AND 3 INDICATE A PROBLEM WITH THE SWING SENSOR OR ASSOCIATED CABLE CONNECTIONS. IF RESISTANCES ARE INCORRECT, REPLACE THE SWING SENSOR AND ITS CABLE.

Swing Sensor Setup And Checks

The following procedures may be used to check or setup the SWING SENSOR. Only two setup operations are required (ZERO and DIRECTION). Unlike other system sensors, the swing sensor requires no span calibration to operate. Span is automatically calculated by the computer.

Checking and Setting Zero

The 0° (zero) angle of the upper structure should be set with the house-lock engaged over front for all types of cranes. Before continuing, ensure that the upper structure is positioned over front and the the house-lock is engaged.

1. Enter calibration mode (see page 4 of the Calibration Manual (W450160)).
2. Go to "Menu 04 – Swing Pot Zero" (see page 20 of the Calibration Manual (W450160)).
3. Check that the angle value displayed is between -0.5° and + 0.5°. If not, reset the zero by pressing the zero key.

Checking and Setting Direction

1. Enter calibration mode (see page 4 of the Calibration Manual (W450160)).
2. Go to "Menu 04 – Swing Pot Zero" (see page 20 of the Calibration Manual (W450160)).
3. Remove the house-lock and swing to the right. Check that the angle value displayed increases from zero. If not, the displayed value will immediately jump to over 350° and continue counting down as the crane upper is swung to the right. If this is the case, press the direction key to reverse the calibrated direction of the sensor.

Appendix A

Frequently Asked Questions

Issue	Resolution	Additional Resolution Items
Communication Error Flashing on display	• Turn ByPass key on the back of the cab to RCL Active • Remove cover from computer unit on back of cab and check the “COMM” indicator for proper operation. Refer to “The COMM indicator” see page 19.	• NO Flash of COMM Indicator when power is applied - System chip or computer faulty • COMM Indicator flashes ONCE when power is applied but does not flash again - Replace system chip • COMM Indicator flashes rapidly continously - Check display cable wiring Data A & Data B for broken wire • COMM Indicator flashes several times then pauses then flashes - Normal operation
Display shows Microsoft® Windows Desktop	• Reseat compact flash card in display. See “Compact Flash Card” on page 25.	• Replace compact flash card. See “Compact Flash Card” on page 25. • Replace display. See “Display Console Removal and Installa-tion” on page 25.
Display shows “NAN” in Actual Hook Load area	• See “Pressure Sensors” on page 21.	• Velocity fuse may be stuck - boom all the way down and go to over relief then boom up
Display shows “---” in Length and Angle area	• Refer to “Extension Reel” on page 29	
Display shows “High Angle Limit” Overload	• Reset the crane data. Refer to “Menu 01 – Crane Data” on page 12 of the Calibration Manual (W450160).	
Display shows “Overload” and no MAX capacity, everything else indicating properly	• Refer to “Swing Sensor Setup and Checks” on page 46.	
Display will not power ON when ignition key is turned to ON	• Check fuses for RCL Permanent Power and RCL Display Power	• It takes BOTH power inputs for display to operate
Unable to remove stowed attachments	• Attachments have been dis-abled in calibration menu. Refer to “Menu 08 – Attachments on page 35 of the Calibration Manual (W450160).	

Issue	Resolution	Additional Resolution Items
Display shows only White LinkBelt Prefered screen	• Remove ALL power from display, wait 10 seconds, reapply power and let display hardboot fully and shut back down (approx. 30 - 50 seconds) before turning ignition key to the ON position	• Do this procedure also for the following conditions: • Black screen - bargraph illuminated - alarm sounding • Black screen - bargraph illuminated - alarm not sounding • Display freezes while in working mode
Display will not change boom modes	• Retract boom fully and verify the boom length indication is correct	• Boom must be fully retracted to change boom modes. If boom length indication is incorrect follow setup procedures in troubleshooting manual for extension sensor setup
There is a RED bell indicated on the display	• There is an Operator Settable Alarm set	

Appendix B

Glossary of terms

Term	Definition
Abort	Stops data entry into the system before the entry process is finalized.
Alarm	A visual or audible warning signal.
Amplifier	Increases - example: a pressure transducer in the millivolt range is amplified up to ten volts).
Amplifier gain	The factor used to express the level of amplification.
Analog	A mechanism in which data is represented by continuously variable physical quantities.
Angle sensor	A device that measures the angle of the boom relative to the horizon.
Annular	Relating to, or forming a ring, e.G. The pressure around the rod of a boom hoist cylinder.
Annular gain	The factor used to modify the pressure signal from the rod side of the boom hoist cylinder based on the difference in areas of the rod and the bore.
Back-up	A copy of data saved in a separate computer chip.
Boom deflection	The change of radius due to the bending of a boom under load.
Boom moment	The turning moment around the boom pivot caused by the moment of the unladen boom.
Bore	The piston side of a boom hoist cylinder.
Calibration	The adjustment of the graduation of sensors.
Capacity chart	A table, supplied by the crane manufacturer, showing the specifications and ratings for each individual crane.
Center of gravity	The point at which the entire weight of a body may be considered as concentrated, so that if supported at this point, the body would remain in equilibrium in any position.
Commissioning	Preparing to be put into service.
Configuration	The position of the crane supporting appendages and all lifting elements of a crane.
Cursor	A pointer on a display that indicates where data is to be entered.
Data	Factual information used as a basis for calculation.
Deduct	A reduction in rated capacity for an unused, stowed, or erected attachment.
Deflection	The bending of a boom or the stretching of pendant lines within the elastic limits of the boom or pendants.
Digital	Operating with numbers shown as digits.
Digital inputs	Computer - usually controlled by external on/off switches.
Direction	The course on which the upper section (superstructure) of a crane rotates.
Duty	A working configuration of a crane usually found in a single column of a capacity chart.
Eeprom	Electrically erasable and programmable “read only” memory (rom).
Elastic	Capable of recovering size or shape after expansion.
Erected attachment	An attachment on the main boom in working (not stowed) position.
Extension sensor	A device that measures the extension of the telescoping sections of a boom.
Fly/jib	An attachment connected by one edge to a crane boom, e.G., A lattice fly, or jib.
Force	Energy exerted, in this case to support the weight of an object.
Geometry	A branch of mathematics addressed to the measurement and relationships of points, lines, angles, surfaces, and solids.
Graduated	Marked with degrees of measurement.

Term	Definition
Height	The vertical distance from the ground to the tip of the boom or attachment.
Hite	An abbreviation of the word height. The height of the boom pivot above ground level.
Horizontal	Parallel to the horizon.
Hydraulic cranes	Using the pressure of oil for operation.
Increment	The action of increasing a number or value.
Initializes	Erases all data from memory prior to a new calibration.
Integrated circuits	A tiny complex of electronic components and connections on a small slice of material (such as silicon).
Measure height	To determine the vertical distance from below the boom pivot to the ground. Radius measurements are made from these points when calibrating.
Microprocessor	A computer processor contained on an integrated chip.
Millivolt	One thousandth of a volt.
Moment	The product of force and distance in relation to a particular axis or point.
Out of duty	A point that is either longer than the longest permitted radius or lower than the lowest permitted angle on a capacity chart.
Outrigger	A mechanical device that projects from the main structure of the crane to provide additional stability or support.
Personality	A computer chip storing active calibration data.
Pressure	Hydraulic pressure in the boom hoist cylinder.
Radius	The horizontal distance from the centerline of rotation to the center of the hook.
Rated capacity	The lifting capacity of a crane, as determined by the manufacturer's published capacity chart.
Rated capacity	The load that a crane can safely support, based on factors such as strength, stability, and rating.
Rating	A factor determined by legislation that limits the action of a crane in a lifting operation. Usually expressed as a percentage of strength or stability.
Restore	Move data from a back-up chip to the personality "a" active chip.
Rom	"Read only" memory. Data can be read but not changed after programming.
Rope limit	The maximum permitted single line pull determined by the construction and diameter of a wire rope.
Save	Move data from the working personality to a 'write protected' area of memory.
Scale	The use of a factor to set the scaling of analog sensors.
Scale	Something graduated when used in measurement.
Sensitivity	The capacity of a sensor to respond to physical stimulus.
Sensor	A device that responds to a physical stimulus and transmits a resulting impulse.
Sheave	A grooved wheel or pulley.
Slew offset	The horizontal distance from the boom pivot to the center of rotation.
Span	An extent or spread between two limits.
Span	The calibration of an analog sensor between zero and maximum span.
Stowed attachment	An attachment usually stored in an inactive position on the main boom.
Superstructure	The structural part of a crane above the carrier, usually rotating.
Swing	The rotation of a crane upper around its centerline.

Term	Definition
Swl (%swl)	Percentage of ‘safe working load.’ The proportion of the crane capacity that is being utilized at any one time and expressed as a percentage of rated capacity.
Transducer	A device that is actuated by energy from one system and converts this energy to another form for use by a different system (as a loudspeaker that is actuated by electrical signals and supplies acoustic power).
Tx.0	The piston side pressure transducer.
Tx.1	The rod side pressure transducer.
Unladen	A boom that has no additional stowed or erected attachments and is not supporting a load.
Volt	Unit of electrical potential difference and electromotive force.
Weight	The amount that a body weighs.
Write protected	An area of memory in a computer that cannot be accessed by a microprocessor for data entry or change.
Zero	The zero point on a graduated scale.

SkyAzúl, Inc.
16 Walnut Street
Middletown, MD 21769
Phone 301-371-6126
Fax 301-371-0029
info@skyazul.com

www.skyazul.com