SkyAzúl
EQUIPMENT SOLUTIONS

maestro

SERVICE MANUAL

NOTICE

SkyAzúl makes no warranty of any kind with regard to this material, including, but not limited to, the implied warranties of merchantability and/or its fitness for a particular purpose.

SkyAzúl will not be liable for errors contained in this manual or for incidental or consequential damages in connection with the furnishing, performance, or use of this manual. This document contains proprietary information, which is protected by copyright, and all rights are reserved.

No part of this document may be photocopied, reproduced, or translated to another language without the prior written consent of SkyAzúl.

SkyAzúl reserves proprietary rights to all drawings, photos and the data contained therein. The drawings, photos and data are confidential and cannot be used or reproduced without the written consent of SkyAzúl. The drawings and/or photos are subject to technical modification without prior notice.

All information in this document is subject to change without notice.

SkyAzúl, Inc.
16 Walnut Street
Middletown, MD 21769
Fax 301-371-0029
info@skyazul.com

CONTENTS

1 GENERAL INFORMATION 5
2 SAFETY INSTRUCTIONS 5
2.1 Tools required 6
2.2 What is new or changed? 6
2.3 What remains same? 6
3 Installation Instructions 7
3.1 Central processing unit 7
3.2 Console 8
3.3 Pressure transducers 9
3.4 Maestro system wiring (0006 Central Unit) 11
3.5 Maestro system wiring (0011 Central Unit) 12
3.5.1 Sensor installation 13
3.5.2 Relay installation (maestro central unit 0006) 14
3.6 Data acceptance or using data EPROM from previous system 15
3.7 Data EPROM extraction from previous system 15
3.8 Cable Reel LWG208/0001 Manual Adjustment Procedure 16
3.9 Automatic sensor adjustment via the console 17
4 Start-up procedure 20
4.1 Checking the data display 20
4.2 Final tests 20
4.2.1 LMI system test procedure 22
5 Procedures 23
5.1 Main Board Replacement Procedure 23
5.2 Cable Reel Length Cable Replacement Procedure 24
6 Troubleshooting moisture 25
6.1 Water Ingress 25
6.2 Condensation 26
7 Error Codes 27
8 Spare part numbers 32
8.1 maestro Console 32
8.2 Pressure Transducer (DAVS300/3401) 32
8.3 Maestro Central Unit 33
9 Version History 34

1 GENERAL INFORMATION

This manual describes the procedure for installation of the HIRSCHMANN ***maestro*** system as a replacement for older PAT systems.

Well-grounded knowledge regarding the method of functioning of load moment indicators as well as knowledge of the start-up procedure and adjustment of such systems are required. In some cases knowledge of the operation and use of burning devices for EPROM's is also required.

Please always comply with the safety instructions!

If you have any questions, please contact your authorized regional dealer.

2 SAFETY INSTRUCTIONS

The following safety instructions must always be observed and complied with.

CAUTION

To prevent material damage and serious or even fatal injuries to staff, the correct adjustment of the LMI has to be ensured before starting operation of the equipment.

The LMI can only function correctly after the conversion, if the following points have been complied with:

- **the correct installation and wiring of all hardware components**
- **the transfer of the data contents of the old system**
- **the checking and if necessary adjusting of the zero points of the sensor technology**
- **the checking of the data display**
- **a functionality test of the entire system and in conclusion a load test**

It is imperative that the operational and safety instructions as well as the load charts provided by the crane manufacturer, particularly for specific operating conditions and load limits, are always referred to.

CAUTION

This system can be equipped with a bypass function, which bypasses the switching-off of the control lever function by the LMI or the A2B switch (-es) system. The bypass control switches must only be activated in emergencies and by authorised staff. Failure to comply with this instruction can result in material damage and serious or even fatal injuries to staff.

The information in this document is subject to change without notice. Hirschmann makes no warranty of any kind with regard to this material, including, but not limited to the implied warranties of merchantability and fitness for a particular purpose. Hirschmann shall not be liable for errors contained herein or for incidental or consequential damages in connection with the furnishing, performance, or use of this manual. This document contains proprietary information, which is protected by copyright. All rights reserved. No part of this document may be photocopied, reproduced, or translated into another language without the prior written consent of Hirschmann.

2.1 Tools required

- Installation tools for mechanical and micro-electric work as:
    - Multimeter, Tools for Wiring – Crimping tool, knife, cutter etc.
    - Screw Drivers, Wrenches, Welder, Digital level

2.2 What is new or changed?

- Central Unit has changed to the Maestro Central Unit.
- The ***maestro*** console in now used in place of the DS 100, DS 200, DS 350 KD/LC, DS 350 G,E,GW consoles.
- Pressure Transducers, KMD Loadcells, SKM Lineriders will need to be modified or replaced by CURRENT Output type sensors (4-20 mA).
- You can either use the same Cannon Plug Cables with adaptor available or use new 5 pin cable for Pressure / Load Sensors.
- Any additional Length / Angle Sensor will be changed to Current Type (4-20 mA)
- Data Eproms will need to changed if not already a 27C256.
- Elimination of the Lightbar option.

2.3 What remains same?

- Main Cable Reel will remain with Voltage Outputs.
- A-2-B Switch remains same.
- Most Cables will remain same, except for: Load Sensors, 7 cond. cables from cable reel to C/U, and Console cable.
- All Digital Inputs & outputs cables remain same.
- Data Eprom from DS 350 G,E & GW and some DS 150 & DS 350 KD/LC's will remain the same. If the Data Eprom is 27C256, you can use it as it is.

3 Installation Instructions

The following instructions are to simplify the conversion of the old LMI system to the HIRSCHMANN ***maestro*** LMI.

3.1 Central processing unit

NOTICE:

Before uninstalling the current central unit, be sure to note the locations of each wire before disconnecting them from the terminal strips. (A wiring diagram of the previously installed system will be useful.) It is necessary to note all Digital Inputs and their respective locations before disconnecting them from the original central unit to ensure proper reinstallation.
Ex. *DI 1: Outriggers, area definition DI 2: Rubber, area definition DI 3: No load/ Power pin fly*
Carefully remove the Data EPROM from the original central unit. This EPROM will be reinstalled into the new data EPROM module at a later point. Please contact your authorized regional dealer with any installation questions.

Install the ***maestro*** central processing unit in such a way that the old electrical wiring can be retained as far as possible. This can be done to install the Maestro C/U at same place as of Old C/U. However, since, Maestro C/U is smaller in Size than most of the previous PAT C/U's, it would be advisable to install it inside the crane cabin behind the operator's seat. If installing the C/U inside the Crane Cabin, ensure that the existing cables are long enough to reach inside the Cabin after re-routing. Instead of welding the mounting squares of the C/U, you may also use Flat Bars with holes at each end, enabling the use of the existing holes.

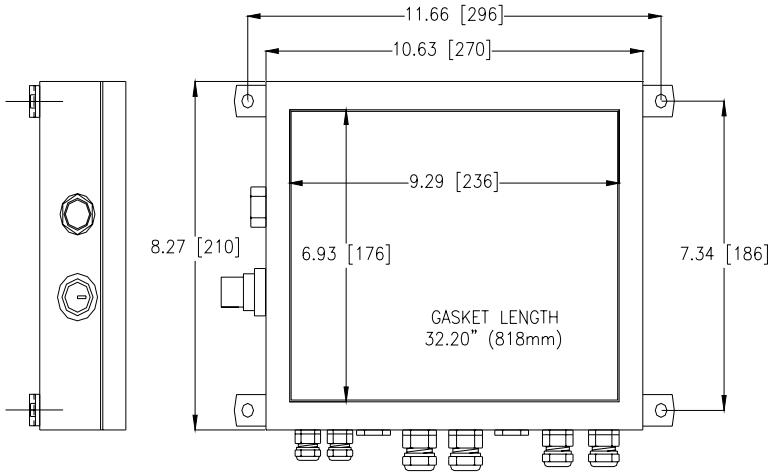

Note that you may be required to modify the Strain reliefs in the C/U depending on the amount and size of wires being used. If an extra hole is needed you can remove the breather from the side of the C/U and utilize this hole, always leave a drip loop in the cables for external mounted C/U's.

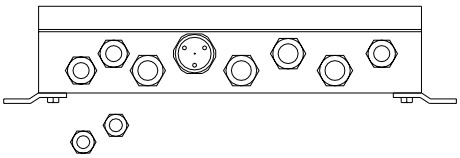

3.2 Console

Install the ***maestro*** console with proper positioning within the field of vision and operating area of the crane operator.

There is a standard length of cable (with multi-pin connector) supplied with the Maestro console. Ensure there is an adequate length of cable between the console and the central unit.

The console has a mount that allows the console to be swiveled into any direction and to be mounted in a variety of locations and on nearly any surface. Choose a location that is in line of site of the sensor and within reach of the operator. Securely attach the two RAM mount bases onto a solid surface for the left and right side operation. The console cable may not fit through goose neck/conduit as existing wiring; therefore, run the console cable to the outside of the conduit and insure there no interference.

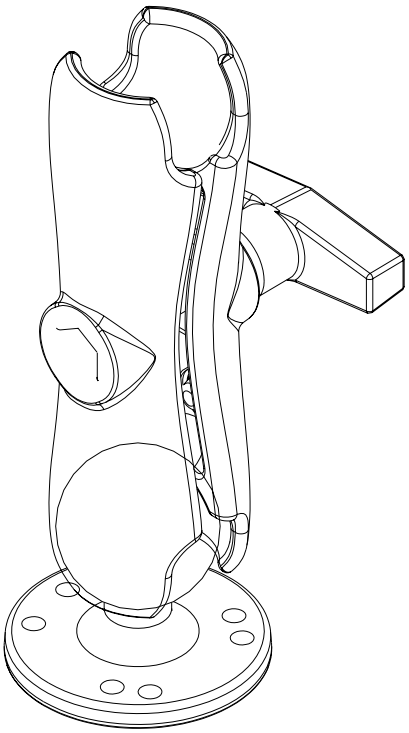

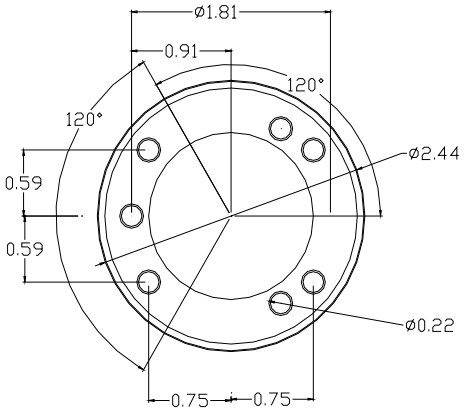

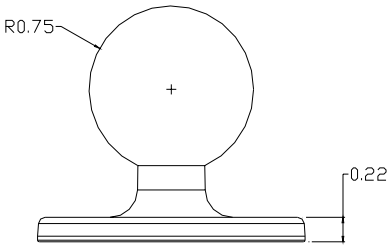

3.3 Pressure transducers

CAUTION

Prior to replacing hydraulic connections of Pressure Transducers, these must be depressurised!
The boom should, first of all, be completely put down and the derrick / lift cylinder depressurised after that.

The pressure transducers of the old system can only continue to be used (in case of GC systems), if these have a signal output of 4…20 mA. A three-pole cable matcher from three-pole Canon to M12x1 is available for the electrical connection.

In the case of the older systems pressure transducers with voltage output are, however, normally in use, which should be replaced with the new pressure transducers of the DAVS 300/3401 SA type with the same pressure range. In this case it is advisable to also replace the feeder cables at the same time with new cables with pre-assembled connection plugs, which are included in the scope of supplies of the maestro conversion kit.

Pressure Transducer (DAVS300 / 3401)
Part Number 031-300-060-452 (4.20mA, 300 bar, M12, 9/16-18)

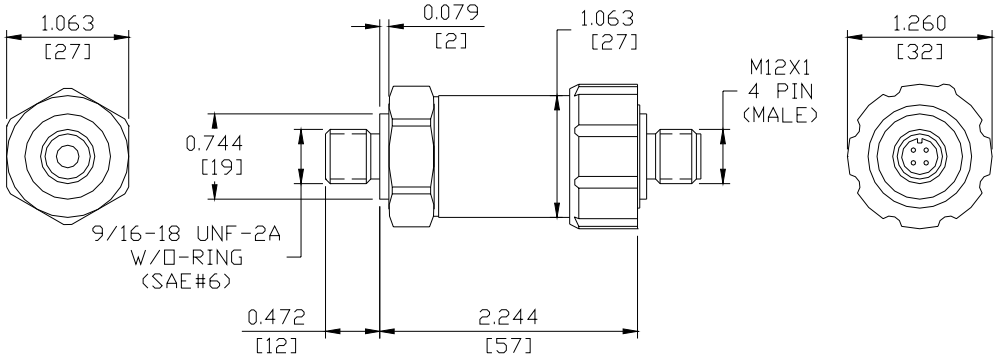

There are no spare parts associated with the pressure transducer; the following parts are use to make a hydraulic connection to a 9/16-18 JIC fitting.
000-209-140-016 Pressure Transducer Cutting Ring Seal
031-300-050-689 Pressure Transducer Adapter, 9/16-18 UNF-2B, M16 X 1.5

You will need hydraulic adaptors to suit the new pressure transducers. The details are shown on the next page:

▶ **Conversion from "OLD" to "NEW"**

Data for current pressure transducers			Kits for 100% replacement of current types				
Pressure range	Order no.	Designation	New sensor Order no.	Electrical adapter Order no.	Hydraulic adapter Order no.	Replacement kit, including - new sensor - electrical adapter - hydraulic adapter Order no.	Designation (new)
300 bar	604240	DAVS 314, SA	606652	532726	532674	606720	DAVS 300/3403 SA M16
300 bar	605237	DAVS 314, SA, M30	606652	532726	532677	606721	DAVS 300/3406 SA M30 DKA
350 bar	605238	DAVS 354, 350 bar, SA, R1/4"	606668	532726	/	606722	DAVS 350/3402 SA
600 bar	605304	DAVS 614, SA, EOL., M16	606647	532726	532674	606723	DAVS 600/3403 SA M16
300 bar	605147	DAVS 314, SA, EOL., M16	606652	532726	532674	606720	DAVS 300/3403 SA M16
600 bar	605402	DAVS 614, SA	606647	532726	532674	606723	DAVS 600/3403 SA M16
300 bar	605972	DAVS 314/09, SA, TT	606652	532726	532674	606720	DAVS 300/3403 SA M16
400 bar	604606	DAVS 414, SA, EOL., M16	606669	532726	532675	606724	DAVS 400/3404 SA M16
300 bar	605173	DAVS 314/07, SA, R1/4"	606652	532726	/	606725	DAVS 300/3402 SA
350 bar	605191	DAVS 354, 350 bar, SA	606668	532726	532674	606726	DAVS 350/3403 SA M16
400 bar	606491	DAVS 414, SA, M30	606669	532726	532677	606727	DAVS 400/3406 SA M30 DKA
600 bar	605403	DAVS 614, SA, EOL.	606647	532726	532674	606723	DAVS 600/3403 SA M16

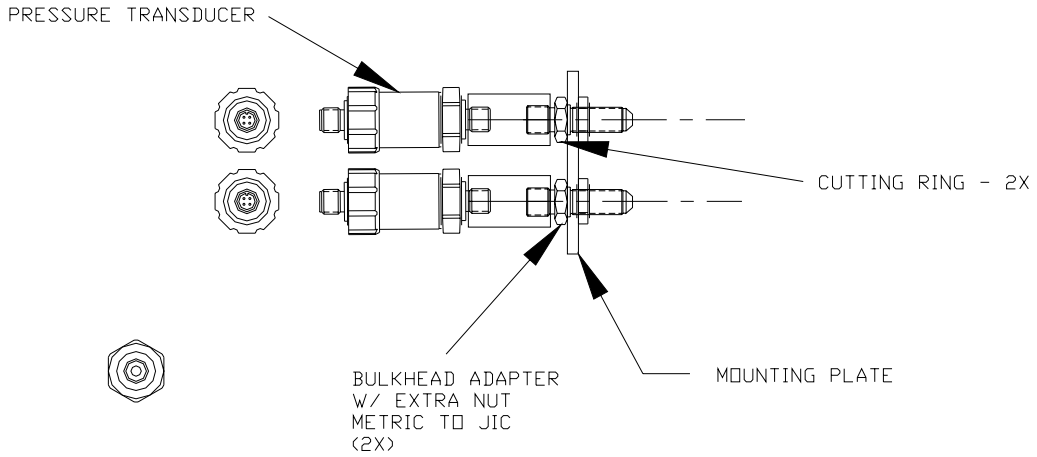

3.4 *Maestro* system wiring - 0006 Central Unit

(prior to May, 2006)

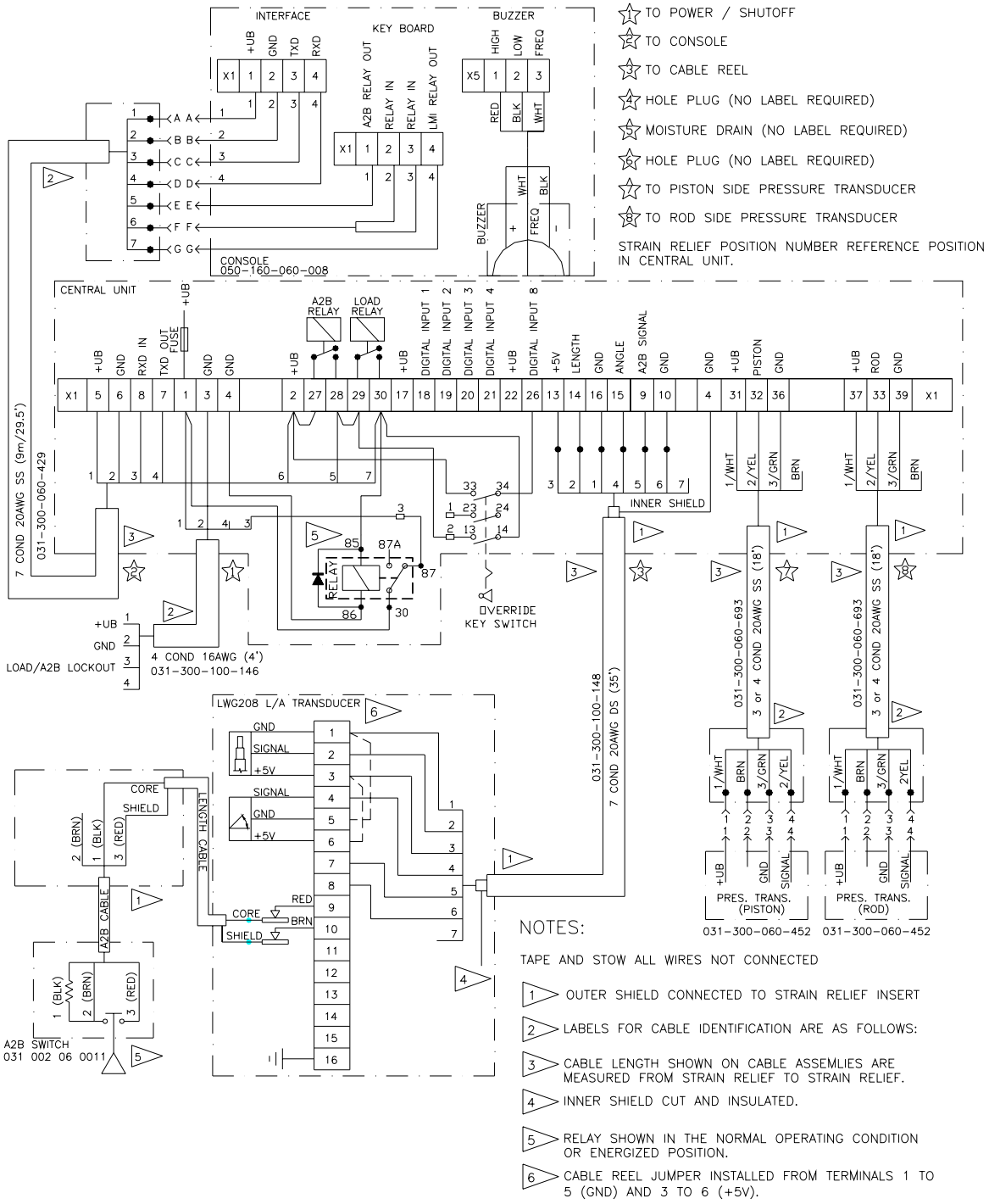

3.5 *Maestro* system wiring (0011 Central Unit)

(May, 2006 – current)

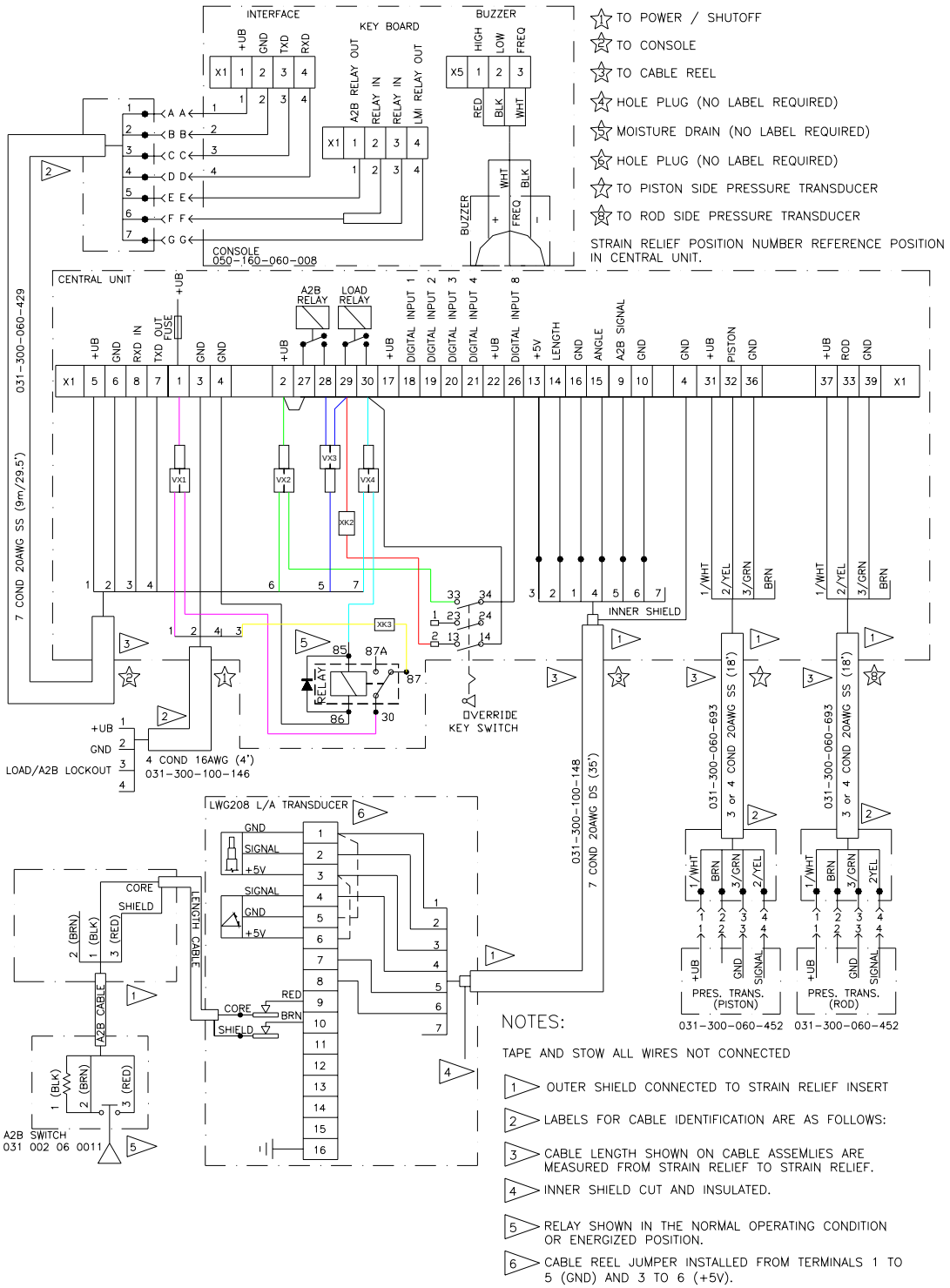

3.5.1 Sensor installation

Reconnect all sensors through the provided locations: Length / Angle Sensor, A-2-B Signal from Cable Reel, Console, Pressure Transducers and Digital inputs and outputs of the crane electrics (Power source and Lock-out to Crane). Ref. 3.4 ***maestro*** wiring diagram.

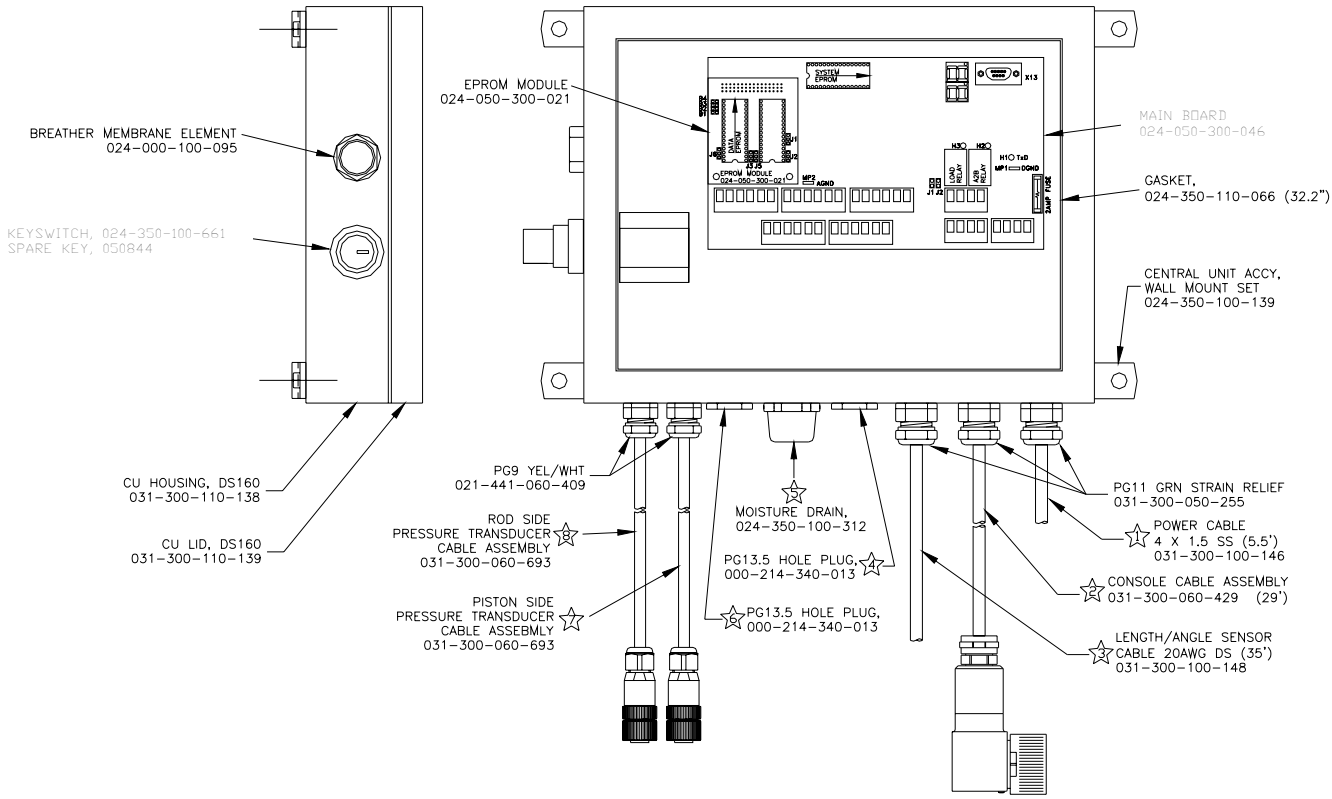

3.5.2 Relay installation (maestro central unit 0006)

(Ref. 3.4 ***maestro*** system wiring)

1. Connect the wires to the relay as described and shown below:
   - Yellow wire to relay terminal #85
   - Black wire to relay terminal #86
   - White wire to relay terminal #30
   - Orange wire to relay terminal #87

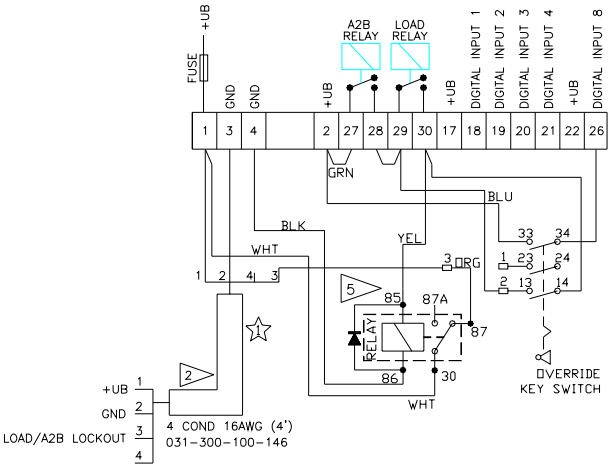

2. Mount the relay to the plastic adhesive holder as shown:

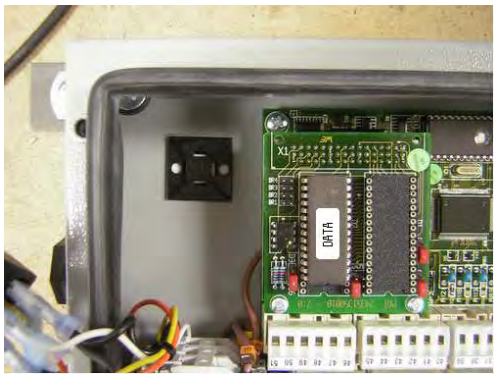

3. The load/A2B lock wire (wire #3 in power cable) will be crimped into the empty ¼" female crimp terminal that is in terminal 1.

Crimp lockout wire in ¼" female crimp terminal 1

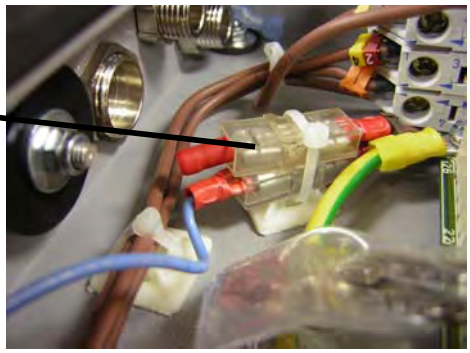

3.6 Data acceptance or using data EPROM from previous system

A distinctive feature of the Hirschmann ***maestro*** system is the possibility of data acceptance from a multitude of older PAT systems *(see list in chapter 2.1)* to convert the data, instructions are provided below for the acceptance with various PAT systems. This means, you can insert Old Data Eprom from Old System without any changes in the software. However, the acceptance of these Data Eproms is limited to the Types / System Codes given in Chapter 2.1.

If any uncertainty or doubt exists as to whether the data can be accepted in your particular case, please contact Hirschmann or an authorised and trained regional dealer to have the conversion capability checked.

3.7 Data EPROM extraction from previous system

1. Remove cover, from central unit.

CAUTION: Before handling the EPROM, discharge any static electricity from your body by touching a grounded point. The EPROM could be damaged by static electricity.

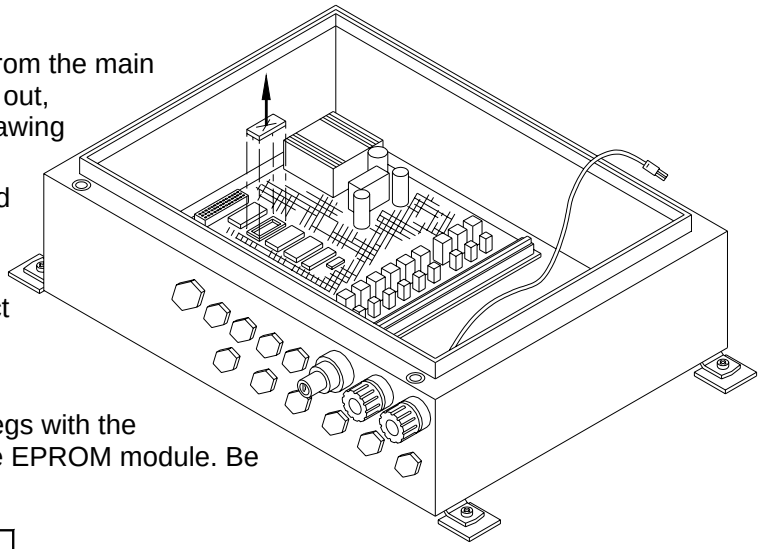

2. Remove the old DATA EPROM, from the main board. Be careful to pull the EPROM out, without bending the legs. Refer to drawing at right.

NOTE: The notch on the EPROM and in the socket determines the correct orientation of the EPROM.

Refer to the drawing below for correct EPROM locations.

3. Carefully align the new EPROM legs with the socket and push the EPROM into the EPROM module. Be careful not to bend any of the legs.

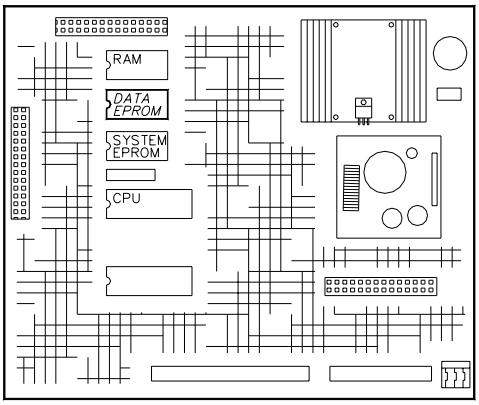

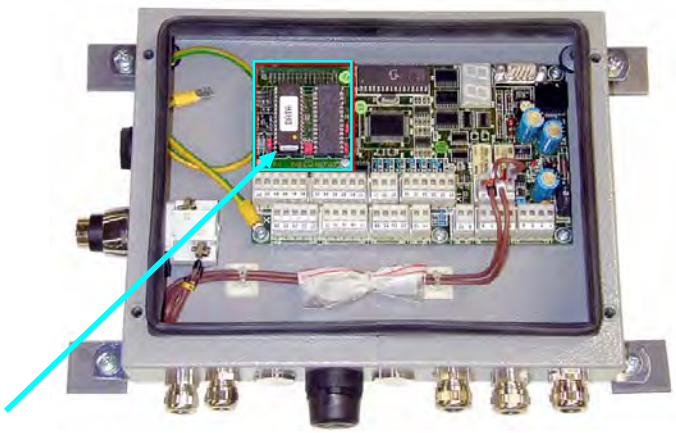

Data EPROM location

3.8 Cable Reel LWG208/0001 Manual Adjustment Procedure

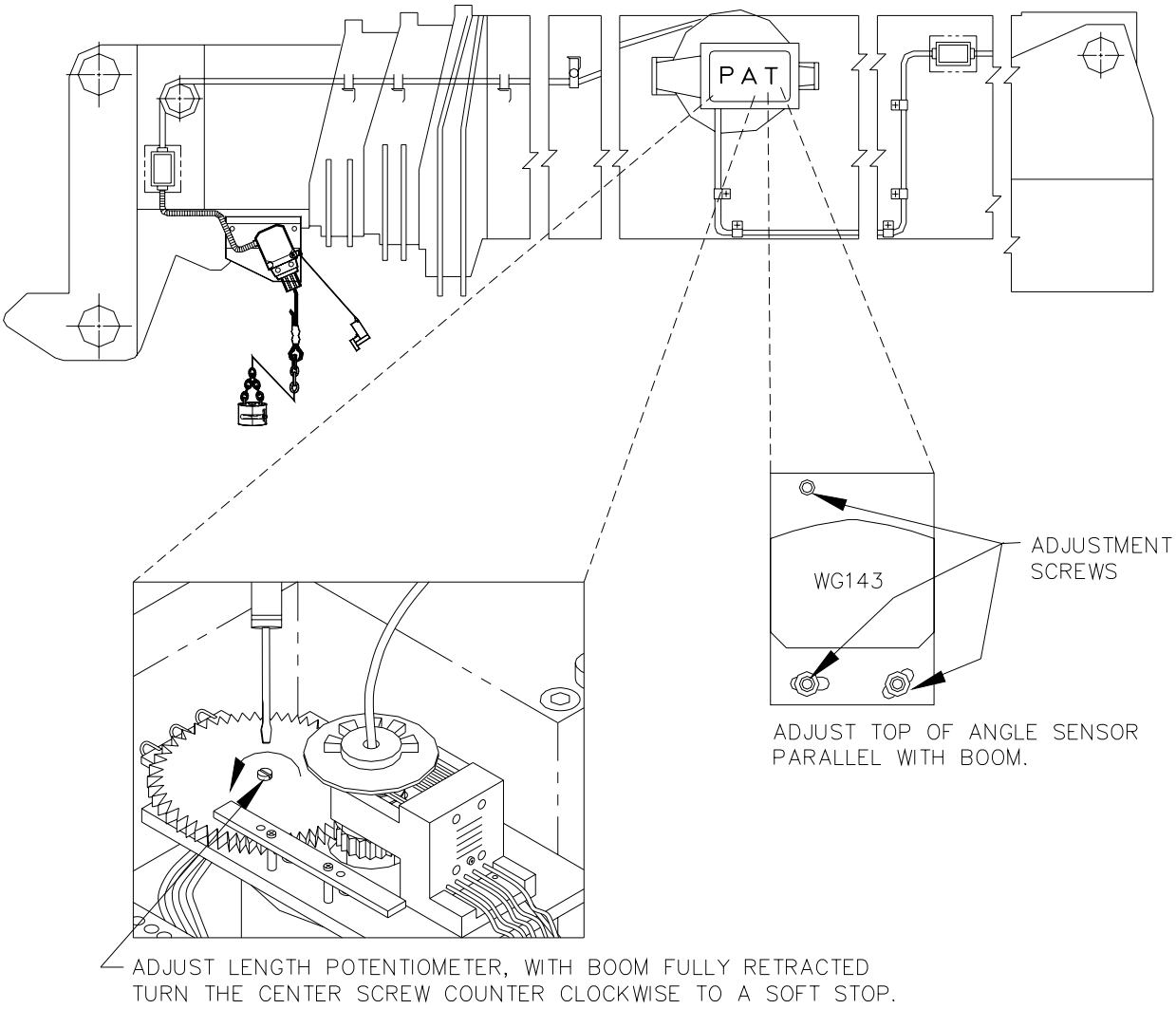

3.9 Automatic sensor adjustment via the console

Input	Display (examples)	Comments
	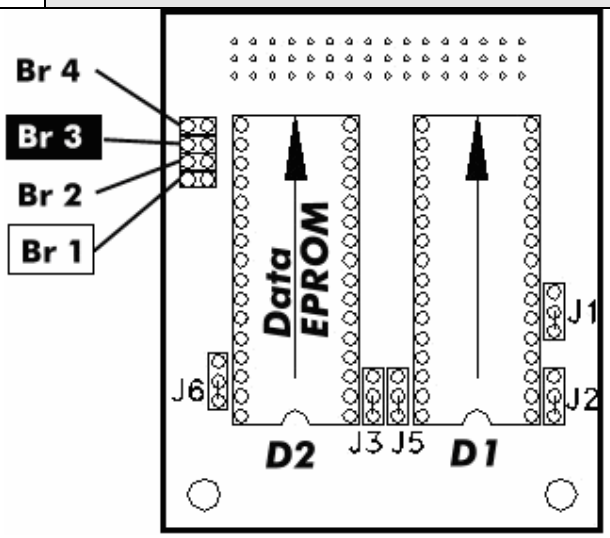	**Conditions:** • To start, ensure the boom is completely down, retracted, depressurised, and engine power turned off. • Remove Jumper from J1 and place on Br 1 of data EPROM module. • Turn **on** crane power. • A valid operational mode must be selected. No error message present. • **While power is on**, relocate the bridge from position Br 1 to Br 3 of the data EPROM module to start the sensor adjustment function.
	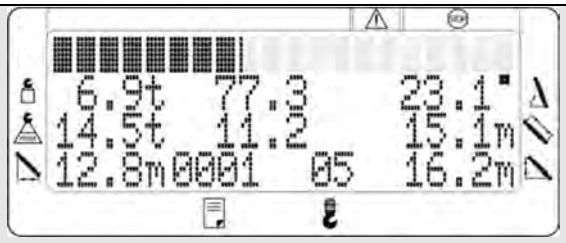	After closing the bridge B3 two additional values for pressure at the cylinder and rod will appear in the middle of the display. **PRESS** To highlight the first adjustment value.
	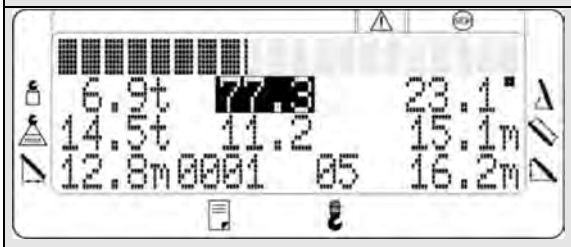	**Adjustment of pressure at the cylinder** Display for pressure at the cylinder flashes. By means of brief, simultaneous pressing the ⬆ and ⬇ keys the value for pressure at the cylinder is set at “zero”. Press to highlight the next adjustment value.

Input	Display (examples)	Comments
	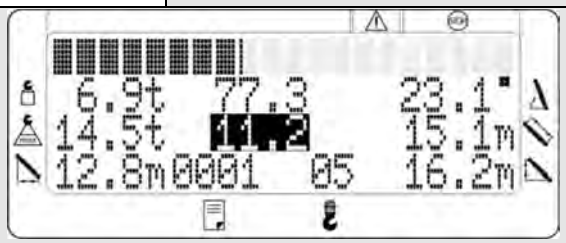	**Adjustment of pressure at the rod** Display for pressure at the rod flashes. By means of brief, simultaneous pressing the ⬆ and ⬇ keys the value for pressure at the rod is set at “zero”. Press to highlight the next adjustment value.
	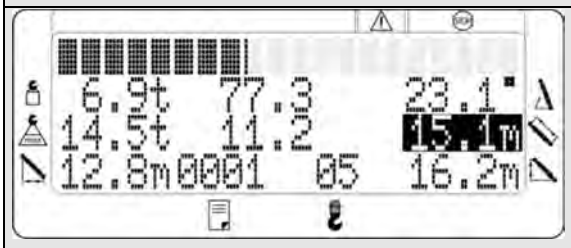	**Adjustment of the main boom length (shortest length)** The boom must be completely retracted with length potentiometer adjusted counter-clockwise to a soft stop! (.5V on term. 14) **Do not try to adjust the length, this is pre-set in the software and is the actual boom length**. If you have the original calibration sheet, this value should match the length displayed. If in doubt contact the authorized dealer. The minimum boom length value is pre-set in the original crane software, **<u>ONLY</u> a confirmation** of this length is required. To confirm this value, simultaneously press the ⬆ and ⬇ keys to reconfirm the minimum boom length stored in the DATA-EPROM. **CAUTION: Do not attempt to arrow up/down to change this indication!** Press to highlight the next adjustment value.

Input	Display (examples)	Comments
	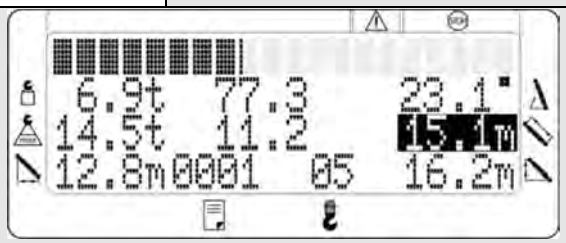	**Adjustment of the main boom length (greatest length)** The boom must be completely extended! Display for length of main boom and the prewarning light flash. **Do not try to adjust the length, this is pre-set in the software and is the actual boom length**. If you have the original calibration sheet this should match the length displayed. If in doubt contact the authorized dealer. The maximum boom length value is pre-set in the original crane software, **ONLY a confirmation** of this length is required. To confirm this value, simultaneously press the ⬆ and ⬇ keys to reconfirm the maximum boom length stored in the DATA-EPROM. **CAUTION: Do not attempt to arrow up/down to change this indication!** Press to highlight the next adjustment value.
	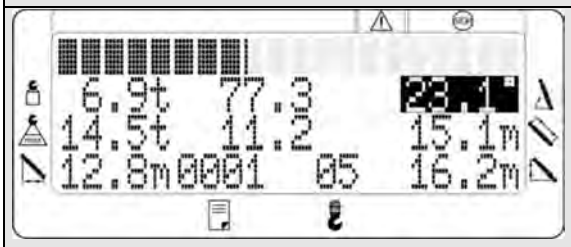	**Adjustment of the main boom angle** Display for angle of main boom flashes. Measure the boom angle to the horizontal with an angle spirit level and input this value by pressing key ⬆ or ⬇. Press to highlight the next adjustment value.

Input	Display (examples)	Comments
	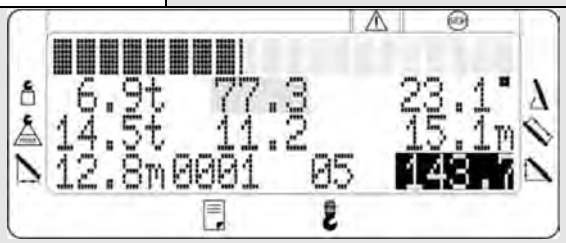	**Adjustment of force measurement*** *in the case of systems with load recording via a force measurement this additional adjustment stage is also displayed. Display for force measurement flashes. By means of brief, simultaneous pressing of the ⬆ and ⬇ keys the value for the force measurement is set at “zero”. Press to highlight the next adjustment value.
		End the process with a final pressing of the key. After that the adjustment process is concluded. The calibration values are stored. Remove the bridge Br 3 and reinstall in Br 1. *(Bridge must be moved to Br 1 before crane power is turned off, to avoid an error)*

4 Start-up procedure

The start-up procedure of the new system is normally shortened a great deal in terms of time due to the transfer of the contents from the central processor memory and the automatic sensor adjustment. It is nevertheless necessary to check the contents of the data displays.

4.1 Checking the data display

Check the geometric data, which are shown on the display, by measuring for accuracy. If deviations arise, these can only be taken in hand by the inputting of correction values in the EEPROM. (Ref. 5.5 LMI test procedure)

If necessary, you can use Hand Terminal to correct any data as usual for old PAT systems.

4.2 Final tests

When all of the settings have been made, it is still necessary for the system to be checked and load testing completed in accordance with the manufacturer's specifications.

(Ref. 4.2.1 LMI Test Procedure)

4.2.1 LMI system test procedure

WARNING
Do not operate the crane out side the permissible operating range for the type of crane / capacity chart being tested.

1) Most crane manufacturer calibrate the cranes with the jib removed it is recommended that this is done to carry out the following test. How ever on some cranes this might not be the case, if in doubt contact the manufacturer.
2) For calibration verification a test load is to be employed for each of the following configuration;

NOTE: For safety reasons first measure the allowable radius for the load being used have a spotter to ensure the system stops the functions at or before this point.

3) Maximum Boom Length and Middle Radius (select a load that will lock out the functions about the middle of the load chart in the long boom length step)
4) The following test should be recorded signed and dated. A copy of this test sheet should be available at all times.
5) Test load to be applied by suspending known weights accurate to +/-1%. Weights of all additional equipment such as blocks, slings, sensors, etc., are included in the test load. The total load is to be known to an accuracy of +/-1%.

With extended boom and the load suspended, move the load smoothly from the short radius to overload lock out, measure and record radius, calculate cut off % see section 6. Ensure the appropriate functions are disabled.

6) Computations:
For each radius measured in the above tests refer to the applicable load rating chart and determine the rated load. At radii intermediate to those on the load chart, rated load shall be determined by linear interpolation unless otherwise specified by the crane manufacturer.

The system accuracy is to be determined from the following formula:

$$\frac{\text{TEST LOAD}}{\text{RATED LOAD at cut off radius/angle}} \times 100 = \text{\% OF RATED LOAD}$$

7) The actual load which activates the overload lock out is not less than 90% of the rated load nor more than 100% of the rated load for the corresponding actual load radius or boom angle.

Note: This is a general standard and variations may exist, if in doubt contact the crane manufacturer.

CALIBRATION TEST
CRANE S/N: _____

Op/ Mode	Parts of Line	Main / B Length	Main / B Angle	Jib / Ext Length	Jib Offset	Actual Load	Indicated Load	Actual Radius	Indicated Radius	Cutoff %

5 Procedures

5.1 Main Board Replacement Procedure

Refer to section 8.2, central unit parts list for board location.

1. Turn system power off.
2. Remove the central unit lid.

NOTE: Take care not to damage the boards with the screwdriver, when removing and inserting screws.

NOTE: Use care when lifting the CPU module board and analog input module from the main board, due to the fact that these boards have pins on the bottom side, which insert into the main board.

3. Disconnect the wiring by unplugging terminal blocks, ensure all blocks and wires are marked to simplify installation. If disconnecting wires from terminal blocks refer to the system wiring diagram in this manual or in the central unit lid for wiring connections.
4. Remove the EPROM module board by taking out the 2 small Philips screws holding it in place.
5. Remove the system EPROM.
6. Remove the main board by taking out the 4 Philips screws holding it in place.
7. Take notice of the orientation of the main board in the central unit. Remove main board and place in the packing material that the replacement main board came in.
8. Carefully insert the new main board in place.
9. Insert the 4 Philips mounting screws.
10. Insert system EPROM.
11. Insert EPROM module board by lining up the pins into the sockets X14 and the 2 screw holes.
12. Insert the 2 small Philips screws and washers.
13. Connect the X1 terminal blocks/wires to the main board. Refer to the system wiring diagram in this manual or in the central unit lid for wiring connections.
14. Turn power on and test system.
15. Inspect the gasket for nicks, cuts, or damages before installing and tightening the cover.

5.2 Cable Reel Length Cable Replacement Procedure

Replace length cable using the following procedure:
Refer to system electrical wiring diagram and cable reel - parts list

1. Cut old cable at cable drum.
2. Disconnect damaged length cable from junction box at the boom nose.
3. Open cable reel cover and disconnect wiring from terminal block. Pull 7 conductor cable out of strain relief. Note: Mark wires to make connection simpler after cable installation.
4. Remove cable reel from mounting brackets.
5. Remove damaged length cable, which is mounted to the slip rings in the cable reel, from slip ring terminal.
6. On the backside of the cable reel, open the strain relief attached to the axle in the center of the drum. Pull existing length cable out of the cable reel.
7. Pull new length cable through the hole, pipe and strain relief and push it through the axle of the reeling drum. Tighten new strain relief to ensure sealing.
8. Reconnect the length cable to the slip ring.
9. Remount cable reel to the boom.
10. Turn reeling drum clockwise to spool the new cable neatly onto the drum.
11. Set pre-load on cable reel by turning the drum counter-clockwise 5 to 8 turns.
12. Run the new length cable through the cable guides and wrap the length cable around the boom tip anchor pin (4 or 5 wraps) and secure with tie wraps. Leave enough length cable to connect into the boom tip junction box.
13. Connect the length cable into the boom tip junction box.
14. Reset length potentiometer in length angle transducer (screw is located in center of white gear); with boom fully retracted, turn potentiometer carefully counter-clockwise until it stops. Recheck length and angle display. Refer to Cable Reel LWG308/0001 Adjustment Procedure.

6 Troubleshooting moisture

The ***maestro*** contains electronic components in various locations, such as central unit, sensors, junction boxes etc. These internal components cannot be designed to withstand exposure to moisture over a longer period of time. For this reason, the housings of the components are water protected according to IP 65. If you find water or moisture inside any of the housings, the source for the water ingress has to be detected and corrected to ensure proper operation.

There are two major possibilities for the occurrence of excessive moisture inside an enclosure:

1) Water ingress
2) Condensation

This outline gives instructions for detecting the cause for excessive moisture by using simple troubleshooting methods and how to prevent the moisture ingress from happening again.

6.1 Water Ingress

There are 6 possibilities for water to enter an enclosure:

1) Spray Cleaning
2) Missing / Loose Screws
3) Bent Lid
4) Defective Gasket
5) Loose Strain Relieves
6) Water Entry Through External Cabling

It is possible to find out the source of water ingress by going through the following steps and ruling out one possibility after the other until the cause is identified:

1) Spray Cleaning
The enclosures used for the ***maestro*** system are water protected to IP 65. This means protection against the environment, such as rain. However, through the use of spray cleaner at short distances, it is possible to force water through the gasket or strain relieves. For this reason, avoid spraying any components from short distances with spray cleaners. Convey this fact to any member of a maintenance crew.

2) Missing / Loose Screws
All screws have to be present and to be equally tight to ensure water protection of the enclosure. If there are screws missing, replace them. If no screw is missing, check the tightness. If any were loose, then open all screws and then re-tighten them equally.

3) Bent Lid
An enclosure will only seal correctly if the lid is not bent. To check this, loosen all screws of the lid, take the lid off the box and visually inspect it for deflection. If the lid is bent or damaged, it needs to be replaced. Try to determine what has caused the lid to be bent and eliminate the reason for that. Order a new lid through your Hirschmann representative.

4) Defective Gasket

The gasket underneath the lid seals the unit. The gasket needs to be in good condition in order to seal correctly. If the gasket is torn, brittle or severely bent, it needs to be replaced. Order a new gasket through your Hirschmann representative.

5) Loose Strain Relieves

The strain relieves allow cabling to enter the box without allowing water to enter it. The strain relieves have to be correctly tightened in order to do this. Check the tightness by taking the external cable into one hand and carefully trying to turn it. If the internal wires turn with the outer cable, the strain relief is loose. Get a new grommet (insert) through your Hirschmann representative and replace the existing one with the new one. Tighten the strain relief correctly. Note: Whenever a strain relief is opened, i.e. to replace a cable, a new grommet needs to be used. Never re-use any grommet or the strain relief will not seal properly!

6) Water Entry through External Cabling

Even with a tight strain relief, water may still enter the box through the inside of the cable. In this case, you have to find out why and where water enters the cable. Look for damages to the cable itself and inspect the opposite side of the cable. In example, if the cable comes from a connector that is full of water, the water will run through the inside of the cable and fill up the central unit, too.

6.2 Condensation

In a climate with high humidity and rapidly changing temperatures, condensation can happen inside any enclosure, usually the larger the volume of the box, the more likely. In this case, water drops build up on the inner components when humid air is trapped inside the box. With condensation, water tightness is not a problem – the box is sealed just fine, which is what prevents the trapped air from exiting the box. There are two ways to deal with condensation:

1. If the volume is very small, a desiccant bag might be able to soak up the air's humidity.
2. If the effect is more severe, the only way to get rid of this effect is then to give the box the ability to breath without sacrificing its water tightness. Contact your Hirschmann representative for breathing elements to than can be added to the box and will help to reduce the effects of humid climates.

7 Error Codes

Error Code	Error	Cause	Remedy
	Overload	• cutoff due to overload	• reduce load moment
	prewarning		
	A2B switch	• the A2B switch is activated	• lower the hook block
E01	Fallen below radius range or angle range exceeded	• fallen below the minimum radius or gone past the maximum angle specified in the respective load chart due to luffing up the boom too far	• luff up the boom to a radius or angle specified in the load chart
E02	Radius range exceeded or fallen below angle range	• gone past the maximum radius or fallen below the minimum angle specified in the respective load chart due to luffing up the boom too far	• luff down the boom to a radius or angle specified in the load chart
E04	Operating mode not acknowledged or non permitted slewing zone	• A non existing operating mode has been selected	• Set the correct operating mode for the operating state in question
		• The boom is in a non-permitted slewing zone	• Slew the boom to a permitted area.
E05	Forbidden length range of the main boom	• Boom has been extended too far or not enough, e.g. if operation is only admitted up to a certain boom length or for load charts of jibs with the boom having to be extended to a certain length. • The length sensor adjustment was modified, e.g. rope slid off the length sensor reel. • Clutch between length sensor pot and drive is defective • Failure of the +5V-supply for the analog part of the LMI-analog board. • Length potentiometer defective.	• Retract or extend boom to the correct length. • Retract the boom. Check the prestress of the cable reel (the rope has to be under traction). Open the length sensor and carefully turn the length pot counterclockwise to the detent by use of a screwdriver. • Completely replace the clutch with the drive wheel and adjust length sensor pot • Check +5V-voltage. If there is no voltage or break down at a charge of 50 ohm approximately, exchange LMI board. • Replace length potentiometer.

E07	Faulty acknowledgment by the overload relay of the LMI board. Relay should be energized but 2nd contact is indicated off, or the 2nd contact is indicated on while the relay should be deenergized.	• Overload relay defective • LMI board defective	• Replace LMI board
E08	No acknowledgement of the anti-two-block switch relay.	• cf. error E07	• cf. error E07
E11	Fallen below limit for the measuring channel "Length main boom".	• .Length sensor pot defective. • Electronic board in the measuring channel defective.	• Replace length sensor potentiometer. • Replace LMI board.
E12	Fallen below the lower limit value in the measuring channel "pressure piston side"	• Cable between the central unit and pressure transducers defective or water inside the plugs	• Check cable as well as plugs, replace, if need be.
		• Pressure transducer is defective.	• Replace pressure transducer
		• Electronic component in the measuring channel is defective.	• Replace LMI main board or processor board.
E13	Fallen below lower limit value in the measuring channel "pressure rod side"	• refer to E12	• refer to E12
E14	Fallen below lower limit value in the measuring channel "pressure piston side Cyl. 2"	• refer to E12	• refer to E12
E15	Fallen below lower limit value for the measuring channel "angle main boom".	• Angle sensor defective. • Electronic part in the measuring channel defective.	• Replace angle sensor. • Replace LMI board.
E16	Fallen below lower limit value in the measuring channel "pressure rod side Cyl. 2"	• refer to E12	• refer to E12
E19	Reference and/or supply voltage defective	• The supply voltage is falsified by one of the sensors (DAV, LWG)	• Check the voltages on the LMI main board (AGND = MP0). Check sensors, plugs and cable, replace, if need be.
		• Electronic component is defective	• Replace LMI board

		• A/D converter of CPU 80C537 defective.	• Replace LMI board
E21	Upper limit value for measuring channel "length main boom" exceeded.	• Length sensor pot defective. • Electronic part in the measuring channel defective.	• Replace length sensor potentiometer. • Replace LMI board.
E22	Upper limit value in measuring channel "pressure piston side" has been exceeded	• refer to E12	• refer to E12
E23	Upper limit value in measuring channel "pressure rod side" has been exceeded.	• refer to E12	• refer to E12
E24	Upper limit value in measuring channel "pressure piston side Cyl. 2" has been exceeded	• refer to E12	• refer to E12
E25	Upper limit value in measuring channel "angle main boom" exceeded	• refer to E15	• refer to E15
E26	Upper limit value in measuring channel "pressure rod side Cyl. 2" has been exceeded.	• refer to E12	• refer to E12
E29	Reference and/or supply voltage defective	• refer to E19	• refer to E19
E31	Error in the system program	• The system program PROM is defective.	• Replace system program PROM (PROM No. 0)
E37	Error in the logic program course	• The system program PROM is defective. • Computer module 80C537 defective. • LMI board defective	• Replace system program PROM (PROM No. 0) • Replace computer module 80C537. • Replace LMI board
E38	System program and data EPROM do not match.	• The system program in the LMI does not match to the programming in the data EPROM	• Replace the system program PROM or the data EPROM (PROM No. 1)
E41	Error in the internal write/read memory (RAM) of the computer component 80C537	• Computer component 80C537 defective • CPU module defective • LMI board defective.	• Replace computer component 80C537. • Replace CPU module. • Replace LMI board with CPU module.
E42	Error in the external write/read memory, 1st part (RAM)	• Write/read memory (CMOS RAM) or LMI board defective.	• Replace LMI board

E43	Error in the external write/read memory, 2nd part (RAM)	• refer to E42	• refer to E42
E48	Cyclic RAM test: error in the internal write/read memory (RAM) of the computer component 80C537	• Computer component 80C537 defective • LMI board defective.	• Replace computer component 80C537. • Replace LMI board
E51	Error in the crane data EPROM or EEPROM.	• No valid data in the crane data EEPROM. • Memory module wrongly bridged. • Crane data EPROM defective	• Load crane data EEPROM containing valid data. • Bridge memory module acc. to memory type • Replace crane data EPROM
E56	Error in crane data EEPROM.	• Memory module wrongly bridged. • Crane data EEPROM defective	• Bridge memory module acc. to memory type • Replace crane data EEPROM
E57	Error in serial crane data EEPROM.	• Serial crane data EEPROM does not contain valid data. • Memory module defective	• Write data on the serial crane data EEPROM (by means of test program or on-line function), then restart the LMI • Replace memory module.
E58	Error in the serial analog data EEPROM.	• No valid data in the serial analog data EEPROM. • LMI main board defective.	• Write data on the serial analog data EEPROM by means of the test program, then, restart the LMI • Replace LMI main board.
E78	Short circuit in the A2B switch circuit	• Short circuit in the A2B switch • Short circuit in the cable to the A2B switch	• Replace A2B switch • Replace cable to the A2B switch
E91	No data transmission form the console to the central unit	• 24 V supply of the console is interrupted	• Check 24 V at terminal X1 of the console electronics
		• Interruption or accidental ground in the line between console electronics and central unit	• Check the connection console electronics - central unit. In case of an accidental ground, the transmitter module of the console electronics might be damaged. Therefore, replaces the console electronics.
		• Transmitter/receiver module is defective	• Exchange console electronics or LMI main board resp.

E92	Error in the data transmission from console to central unit	• Loose connection in the line between console electronics and central unit • Transmitter/receiver module is defective	• Check the connection between console electronics and central unit • Exchange console electronics or LMI main board resp.
E93	Error in the data transmission from the central unit to the console	• refer to E92	• refer to E92
E94	No data transmission from the central unit to the console	• Interruption or accidental ground in the line central unit - console	• Check line to the console (in case of accidental ground, replace console electronics, too).
		• 5 V supply of the computer in the central unit is missing	• Check connection to the power unit
		• 5 V supply is too low	• Exchange the LMI main board
		• Transmitter/receiver module is defective	• Replace console electronics or LMI main board
		• Computer module is defective	• Replace processor board.
		• Electro-magnetic interferences (e.g. when switching contactors or valves)	• Eliminate the source of interferences by inverse diodes or varistors.
E95	Error in the console EPROM	• The console EPROM is defective.	• Replace the console EPROM
E96	Error in the internal RAM of the console.	• The CPU of the console is defective. • The console main board is defective.	• Replace the CPU of the console • Replace the console main board.

8 Spare part numbers

8.1 maestro Console

Part Number 050-160-060-008
(Refer to system wiring diagram for console wiring connections to central unit)

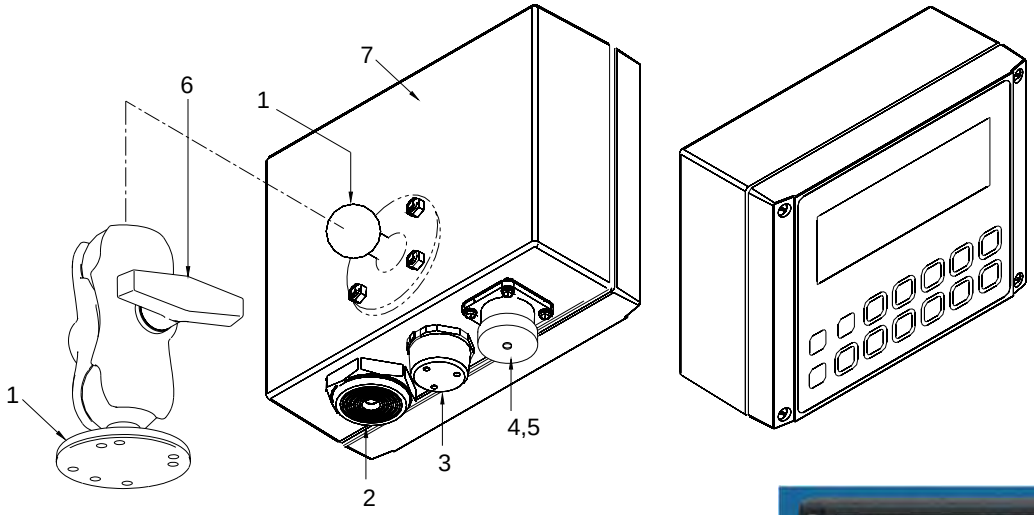

NO.	PART NO.	QTY	DESCRIPTION
1	031-300-050-635	2	BASE. 2/5" DIA.
2	050-000-100-274	1	BUZZER
3	024-350-100-312	1	MOISTURE DRAINAGE PLUG
4	031-300-100-391	1	CONNECTOR, 7-PIN RECEPTACLE
5	031-300-100-024	1	DUST CAP
6	031-300-050-624	1	MOUNTING ARM 4.63" FOR 1.5" BALL
7	050-160-100-008	1	HOUSING, PREASSEMBLED (WITH FRONT FOIL)
*8	050-050-300-030	1	CONSOLE, CPU UNIT
*9	050-000-100-267	1	DISPLAY UNIT
*10	050-050-300-036	1	KEYBOARD

* WITHOUT ILLUSTRATION

8.2 Pressure Transducer (DAVS300/3401)

Part Number 031-300-060-452 (4.20mA, 300 bar, M12, 9/16-18)

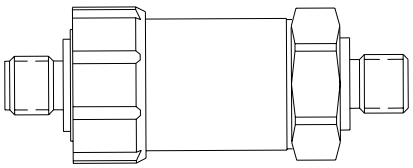

There are no spare parts associated with the pressure transducer; the following parts are use to make a hydraulic connection to a 9/16-18 JIC fitting.
000-209-140-016 Pressure Transducer Cutting Ring Seal
031-300-050-689 Pressure Transducer Adapter, 9/16-18 UNF-2B, M16 X 1.5
(Ref. 3.3 Pressure Transducer Installation)

8.3 Maestro Central Unit

Part Number 024-160-060-011
(Refer to system wiring diagram for wiring)

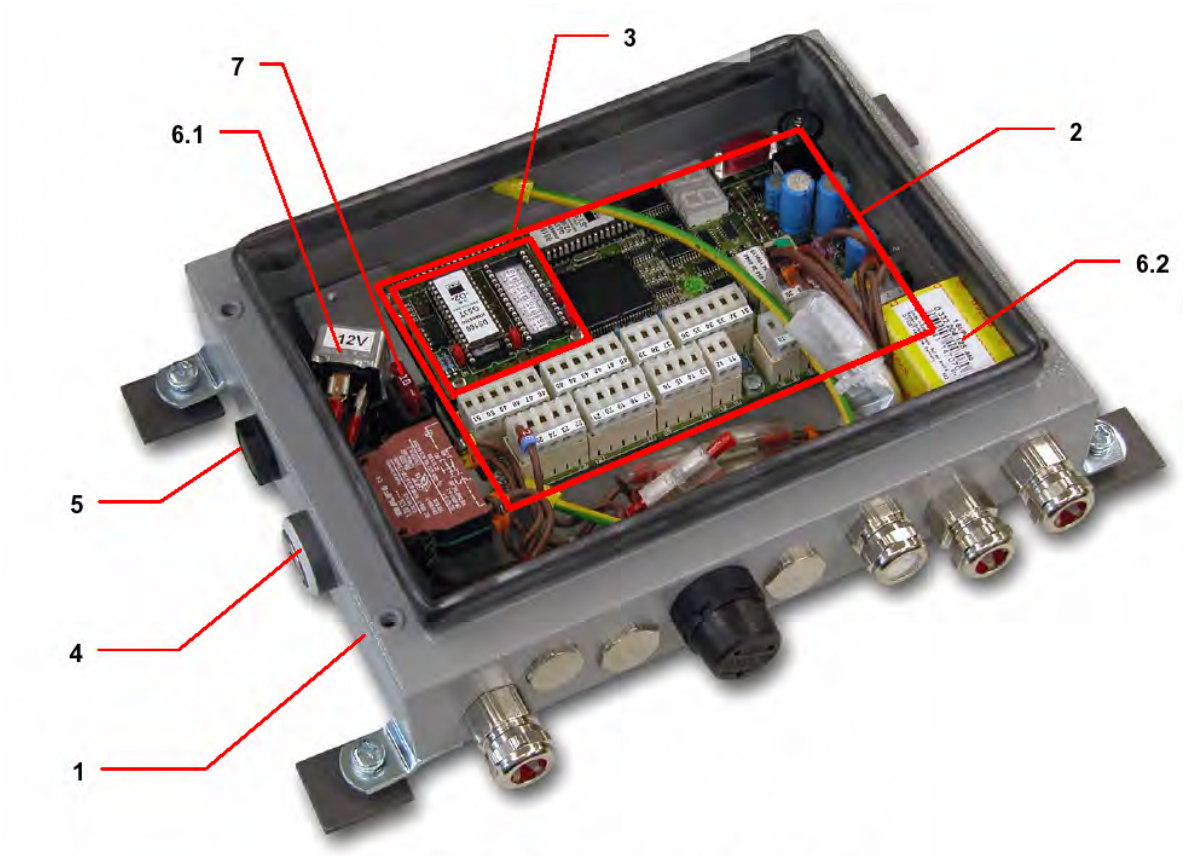

(housing w/o cable glands and w/o blind covers)

NO.	PART NO.	QTY	DESCRIPTION
1	024-000-050-339	1	HOUSING
2	024-050-300-046	1	MAIN BOARD, LMI
3	024-050-300-021	1	DATA EPROM MODULE, JUMPER W/O PROMs
4	024-000-100-281	1	KEYSWITCH, KIT
5	024-000-100-095	1	PRESSURE COMPENSATION ELEMENT, (PG11)
*6	024-000-100-285	1	CUT-OFF RELAY, KIT, 12V
°6.1	024-000-100-282	1	CUT-OFF RELAY, 12V
°6.2	024-000-100-286	1	CUT-OFF REALY, 24V (ALT. STOWED INSIDE CU)
7	000-313-301-002	1	FUSE, 10A
*8	50844	1	KEY, CENTRAL UNIT

* item without illustration ° comprised in lead item

SkyAzúl, Inc.
16 Walnut Street
Middletown, MD 21769
Phone 301-371-6126
Fax 301-371-0029
info@skyazul.com

www.skyazul.com