SkyAzúl
EQUIPMENT SOLUTIONS

PRS145

SERVICE MANUAL

NOTICE

SkyAzúl makes no warranty of any kind with regard to this material, including, but not limited to, the implied warranties of merchantability and/or its fitness for a particular purpose.

SkyAzúl will not be liable for errors contained in this manual or for incidental or consequential damages in connection with the furnishing, performance, or use of this manual. This document contains proprietary information, which is protected by copyright, and all rights are reserved.

No part of this document may be photocopied, reproduced, or translated to another language without the prior written consent of SkyAzúl.

SkyAzúl reserves proprietary rights to all drawings, photos and the data contained therein. The drawings, photos and data are confidential and cannot be used or reproduced without the written consent of SkyAzúl. The drawings and/or photos are subject to technical modification without prior notice.

All information in this document is subject to change without notice.

SkyAzúl, Inc.
16 Walnut Street
Middletown, MD 21769
Fax 301-371-0029
info@skyazul.com

TABLE OF CONTENTS

1 MECHANICAL DESCRIPTION OF THE COMPONENTS 1

2 MECHANICAL AND ELECTRICAL DESCRIPTION OF THE CENTRAL UNIT 2

3 BASIC ADJUSTMENT OF THE HARDWARE 3

4 DEFINITIONS 4

5 DRAWINGS 5

5.1 WIRING DIAGRAM - CENTRAL UNIT SHUT OFF 5
5.2 CENTRAL PROCESSOR 12/24 VDC 6
5.3 ELECTRICAL DIAGRAM - CONSOLE 7
5.4 INDICATOR PANEL/CONSOLE 8
5.5 ELECTRICAL DIAGRAM - CABLE REEL TO CENTRAL UNIT 9
5.6 ELECTRICAL DIAGRAM - CABLE REEL TO CENTRAL UNIT 10
5.7 CABLE REEL 34/50 M 11
5.8 CABLE REEL 24/30 M 12
5.8.1 Length Sensor Assembly: 13
5.8.2 Angle Sensor Assembly 14
5.9 ANTI-TWO-BLOCK ELECTRICAL DIAGRAM 14
5.10 ANTI-TWO BLOCK SWITCH 15
5.11 ELECTRICAL DIAGRAM – PRESSURE TRANSDUCER TO CENTRAL UNIT 16
5.12 PRESSURE TRANSDUCER (250 BAR): 1-0108060.00 17
5.13 PRESSURE TRANSDUCER CABLE ASSEMBLY 17
5.14 JUMPER CABLE ASSEMBLY FOR EXTENSION 18

6 PROCEDURES 19

6.1 ANGLE SENSOR ADJUSTMENT 19
6.2 EPROM REPLACEMENT IN CENTRAL UNIT 20
6.3 PISTON & ROD PRESSURE CHANNEL ADJUSTMENT 21
6.3.1 Adjust pressure piston: 21
6.3.2 Adjust pressure Rod: 21
6.4 ANGLE TRANSDUCER REPLACEMENT AND ADJUSTMENT 22
6.5 LENGTH TRANSDUCER REPLACEMENT AND ADJUSTMENT 24
6.6 LENGTH CABLE REPLACEMENT 26

7 TROUBLESHOOTING FLOW CHARTS 27

7.1 GENERAL FLOWCHART 27
7.2 LEVER LOCKOUT ACTIVATED 28
7.3 BLANK DISPLAY 29
7.4 ANTI-TWO-BLOCK PROBLEM 31
7.5 LENGTH READING PROBLEM 34
7.6 ANGLE READING PROBLEM 35

8 ERROR CODES 36

8.1 OPERATOR ERROR CODE TABLE 36
8.2 SYSTEM ERROR CODE TABLE 38

9 CONNECTION DESCRIPTION CONSOLE/CENTRAL UNIT 40

1 MECHANICAL DESCRIPTION OF THE COMPONENTS

Pressure Transducer:
The pressure transducer transforms hydraulic pressure into an electric analogue voltage signal. Two pressure transducers are connected, one to the rod side and one to the piston side of the lift cylinder. The pressure transducer is connected to the central unit with a four conductor, double shielded cable.

The power supply voltage is +12V.

The output signal is 2.500V at 0 pressure to 7.500V at maximum pressure (250bar).

Cable Reel:
The cable reel houses the length-angle transducer, slip ring disc and slip ring pick up (to feed and return A-2-B signal). The PE cable goes through the drum and out to the tip where it is wired to the Anti-Two-Block switch. The reel is driven by a tensioned spring and should be handled with caution.

The Length-Angle Transducer:
The length-angle sensor (LWG) is a combination of two transducers in cable reel, fitted at the base section of the boom. It measures the length and the angle of the boom. A reeling drum drives a potentiometer, which is the length transducer. Part of the length transducer is the length cable on the drum, which is a two-conductor cable (shield and core). It is connected to the anti-two-block switch at the boom head and to a slip ring body in the LWG. The angle transducer is fitted in the cable reel. A pendulum drives the axle of the angle potentiometer.

The power supply voltage for both is +5.00V

The output signal for the length transducer is: +1.000V up to +5.000V

The output signal for the angle transducer is: +1.000V up to +5.000V

Anti-Two-Block Switch:
The anti-two-block switch monitors the load block and its relationship with the head of the boom. In working condition, the switch is closed. When the hook block strikes the weight the circuit opens, disengaging a relay output to the lock out solenoid valves, where applicable. The weight at the anti-two-block switch keeps the switch closed until the hook block strikes it.

Console:
The console displays all geometrical information such as length and angle of main boom and working radius. It also displays the actual load and the maximum load permitted by load chart. Furthermore, it has an alarm horn and a warning light for overload, and a pre-warning light. The LED's instrument shows a percentage of the total permissible moment. The console has pushbuttons to switch the operating modes (for selection of crane configurations and reeving of the block). It also has a warning light for overload, anti-two-block conditions and an override push-button for anti-two-block condition.

2 MECHANICAL AND ELECTRICAL DESCRIPTION OF THE CENTRAL UNIT

All data of the crane are stored inside the central unit in EPROMs. The central unit gets all actual information of the crane. This is computed against the reference data and the crane status continually monitored.

Description of the Housing:
The PRS145 central unit has a water proof aluminum housing. It is mounted on the left side of the turntable weldment or on the counterweight. The cables are led into the central unit via strain reliefs and connected with fast-ons. An override switch is mounted on the housing to override the LMI function. The system is protected by a 2-AMP fuse that is mounted on the lower right side.

Description of the Boards:
Inside the central unit there is one board. The main board that has terminal strips where power and various components are connected with fast-ons to the terminal strip. The main board is the heart of the system. It contains the main computer and the necessary electronics to receive, evaluate, process and direct the continuous data. There are overload and anti-two-block relays, which control the Bosch relay for lever lockout, also mounted on this board.

A 24/12 volt converter, (for 24 volt cranes) which converts 24 volts to 12 volts on the main board.
An analogue input part, which receives and prepares all the signals from the transducers for further processing.

An analogue/digital converter part , which converts all the processed analogue signals into digital ones.

A digital part , which contains the main computer and the ancillary electronics.

Incoming Signals:
The signals from the transducers are connected to the terminal board. The signals of the angle-length transducer are connected to terminal #56 (angle) and terminal #53 (length). The signal on terminal #56 (angle) is between approximately +1.000V and +4.500V. The signal on terminal #53 (length) is between +1.000V and +4.500V. The signals from the pressure transducers are connected to terminal #52 (rod side) and terminal #51 (piston side). The signals on terminals #51 and #52 range between +2.500V and +2.500V.

The signal from the force transducer is connected to the terminals #51 and #52 range between+2.500V and +7.500V. The supply voltage +12vdc for the anti-two-block switch is terminal #72 and return signal on terminal #71.

Outgoing Signal:
The outgoing signal of the terminal board is the signal for lever lockout of terminal #87 on the Bosch relay. In normal working conditions there are 12 or 24 volts at this terminal. When there is an overload or anti-two-block condition the signal becomes 0 volts. Furthermore, all voltages for the transducers and console are going out via the terminal strip.

3 BASIC ADJUSTMENT OF THE HARDWARE

Length:
Ensure that the length cable tension is correct with fully retracted boom by turning the cable reel 2 to 3 turns counterclockwise and check that reel fully retracts. Then remove cover from cable reel and adjust arm mounted on the potentiometer till length indication is correct.

Angle:
Set the boom to 0 degrees and set a digital level on the boom. Adjust the angle sensor to the same angle as the boom. Check the angle at 20 degrees, 45 degrees, 70 degrees. Angle display should be less than ± .5 degrees of the value of the inclinometer.

Pressure Channel:
Rest the boom and disconnect the pressure transducers. Measure the voltage of both pressure transducers on the terminal board. The output voltage of the pressure transducers should be 2.500vdc +/- .025vdc.

Check the function of the hoist limit switch (anti-two-block)

Check function of lever lockout.
Measure and record the power supply voltages.

4 DEFINITIONS

BOOM LENGTH The straight line thru the centerline of boom pivot pin to the centerline of the boom point load hoist sheave pin measured along the longitudinal axis of the boom. (Indicator ± 2%)

BOOM ANGLE The angle between the longitudinal centerline of the boom base section and the horizontal plane. (Indicator 65° to 90° boom angle + 0°/2°; less than 65° boom angle + 0°/-3°)

RADIUS OF LOAD The horizontal distance from a vertical projection of the crane's axis of rotation to the supporting surface, before loading, to the center of the vertical hoist line or tackle with rated load applied. (Indicator 100% to 110%)

RATED LOAD The load value shown on the applicable load ratings chart of the crane for the particular crane configuration, boom length, boom angle, or functions or these variables. For radii outside those shown on the load ratings chart, the rated load is to be considered as zero.

ACTUAL LOAD The weight of the load being lifted and all additional equipment such as blocks, slings, sensors, etc. Also referred to as working load. (Indicator 100% to 110%)

CRANE CONFIGURATION The physical arrangement of the crane as prepared for a particular operation in conformance with the manufacturer's operating instructions and load rating chart.

TWO-BLOCKING Contact of the lower load block or hook with the upper load block, boom point, or boom point machinery.

ANALOGUE Electrical signals that vary in proportion to the quantities they represent. (Boom length, angle, and pressure transducer)

DIGITAL Electrical signals of an on-and-off-state (two different voltage levels) to represent some quantity of operation. (A2B, area definition switch)

5 DRAWINGS

5.1 WIRING DIAGRAM - CENTRAL UNIT SHUT OFF

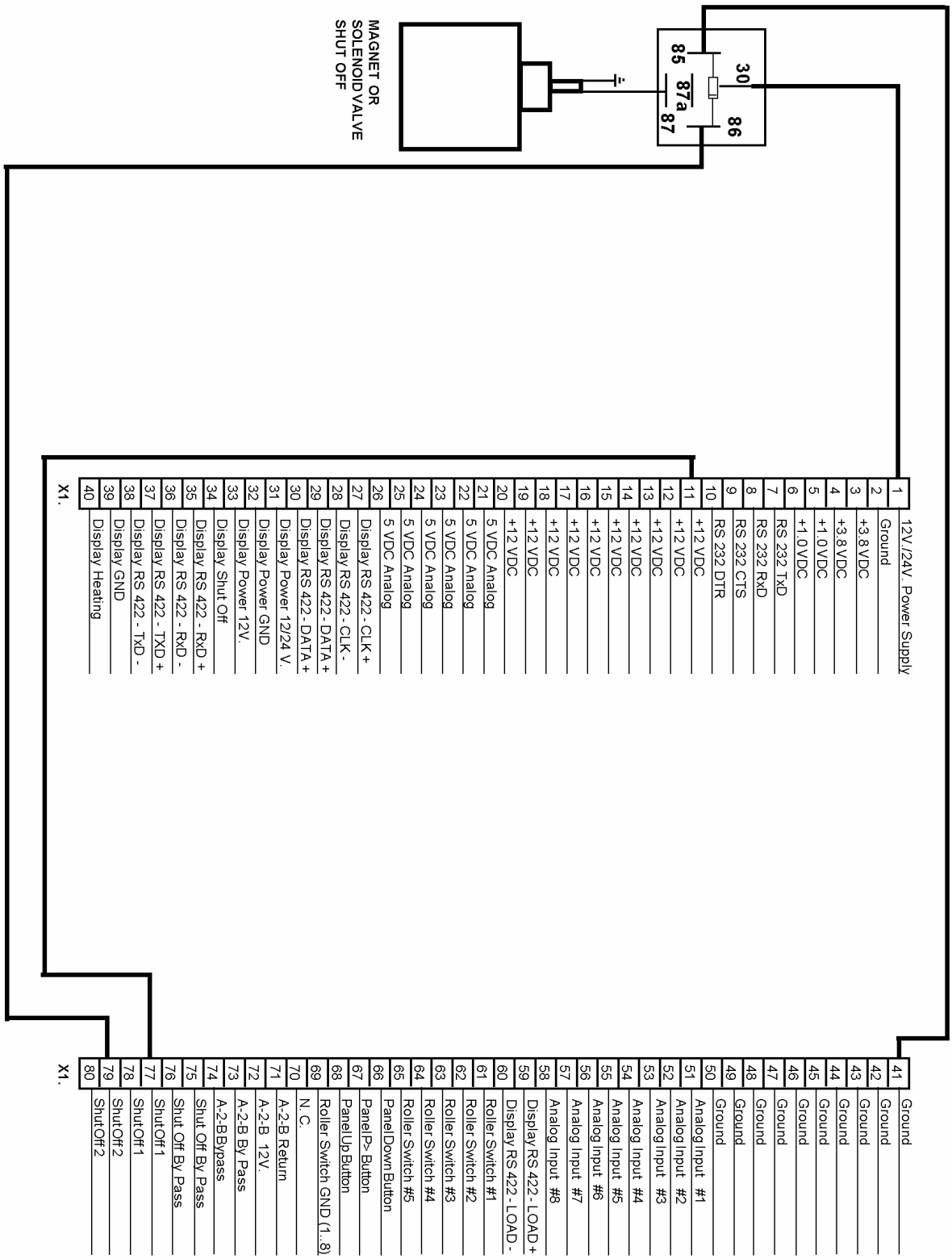

5.2 CENTRAL PROCESSOR 12/24 VDC

1-0116440.00 Spare Parts List

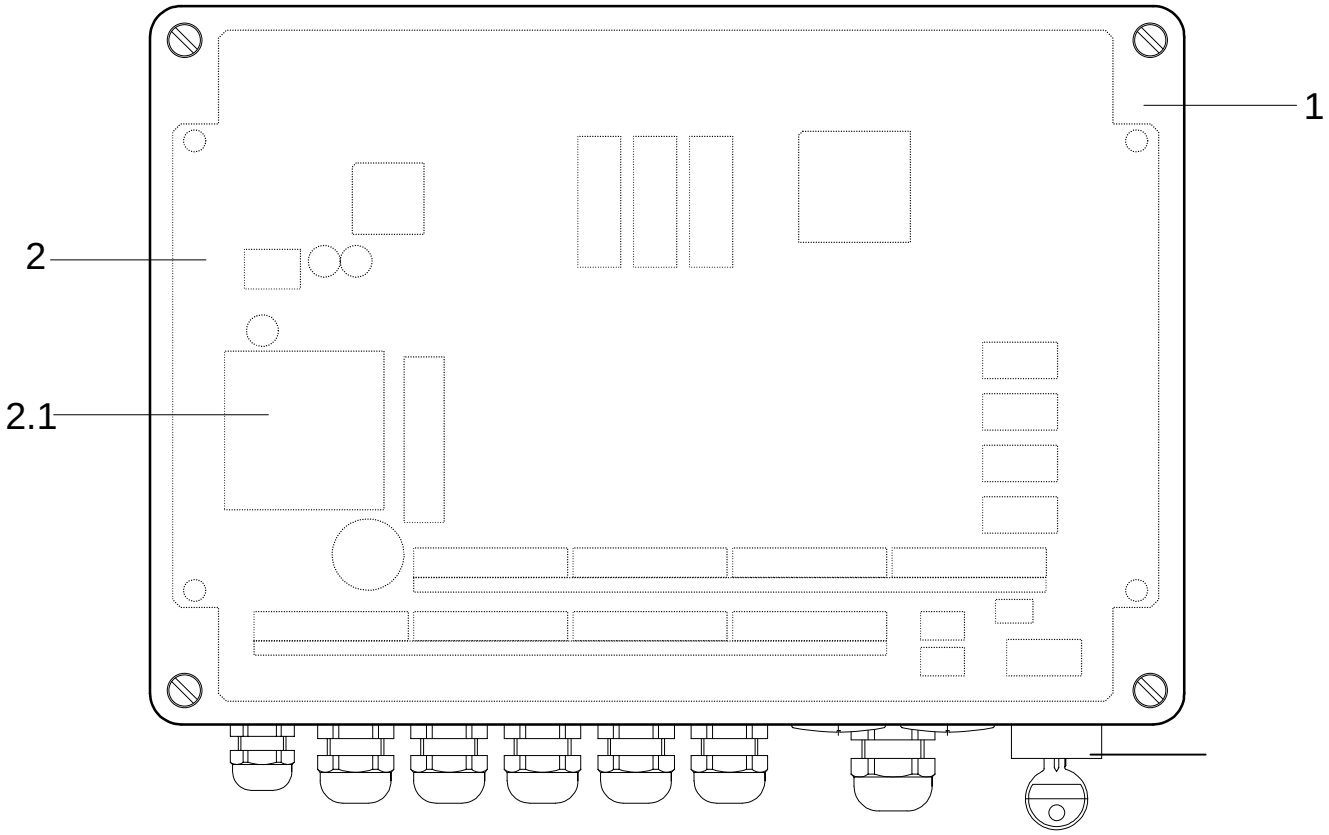

ITEM	DESCRIPTION	QTY	PART NUMBER
1	Housing	1	1-0103719.00
2	P.C. Board (Central Processor)	1	1-0116073.00
3	Module (DC/DC Converter)	1	1-0028174.00
4	Key Switch	1	1-0103247.00

5.3 ELECTRICAL DIAGRAM - CONSOLE

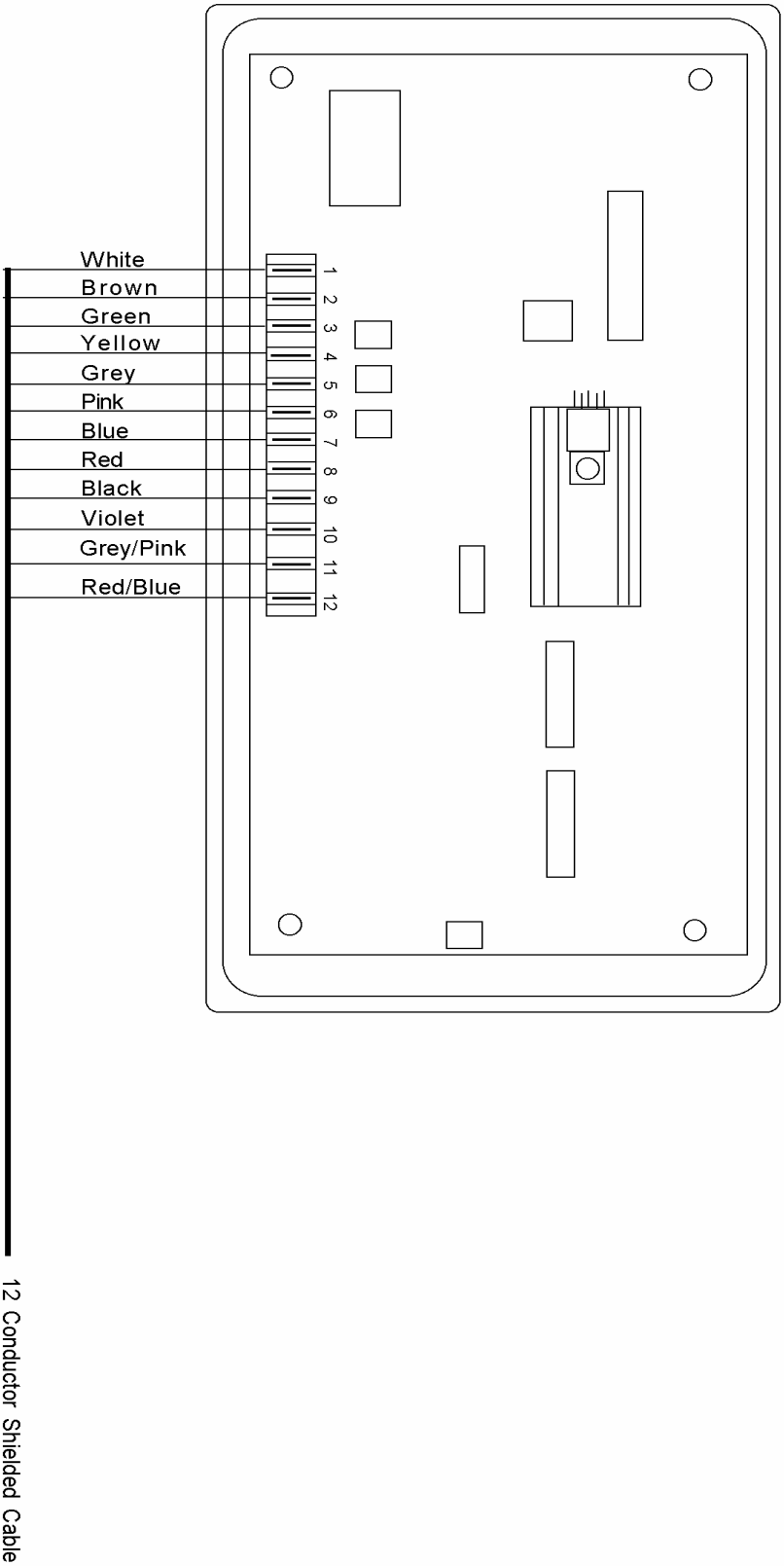

5.4 INDICATOR PANEL/CONSOLE

1-0118417.00 Spare Parts List

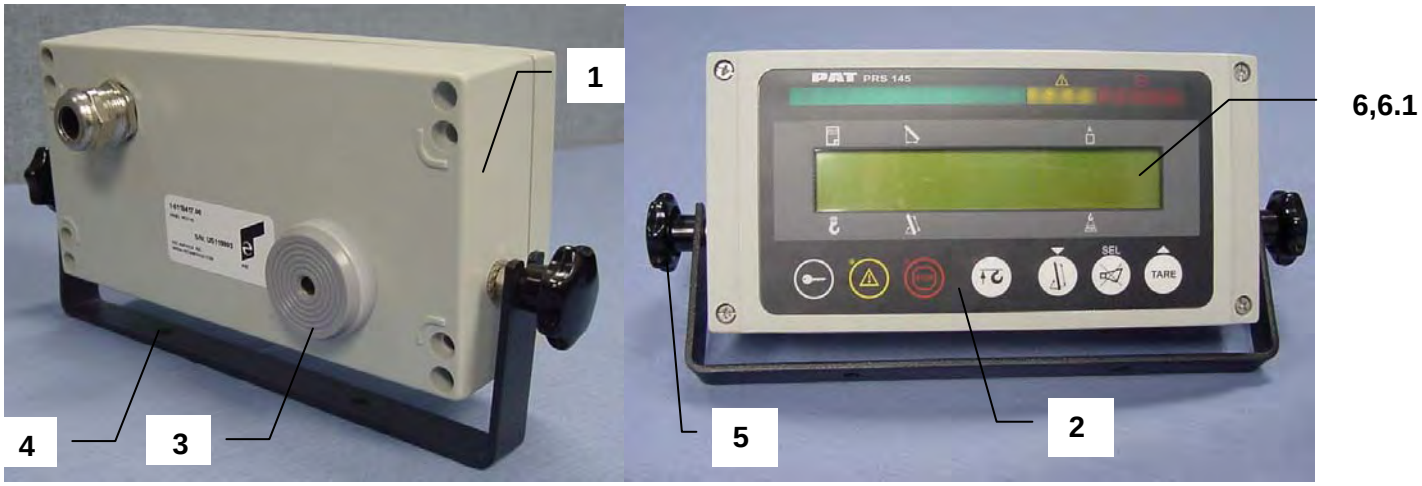

ITEM	DESCRIPTION	QTY	PART NUMBER
1	Housing	1	1-0116046.00
2	Membrane Push Button	1	1-0118389.00
3	Buzzer	1	1-0012135.00
4	U-Shackle	1	1-0116059.00
5	Mounting Knob	2	1-010667800
6	P.C. Board	1	1-0115673.00
6.1	LCD-Matrix-Display	1	1-0114234.00

5.5 ELECTRICAL DIAGRAM - CABLE REEL CABLE REEL (34/50 M) TO CENTRAL UNIT

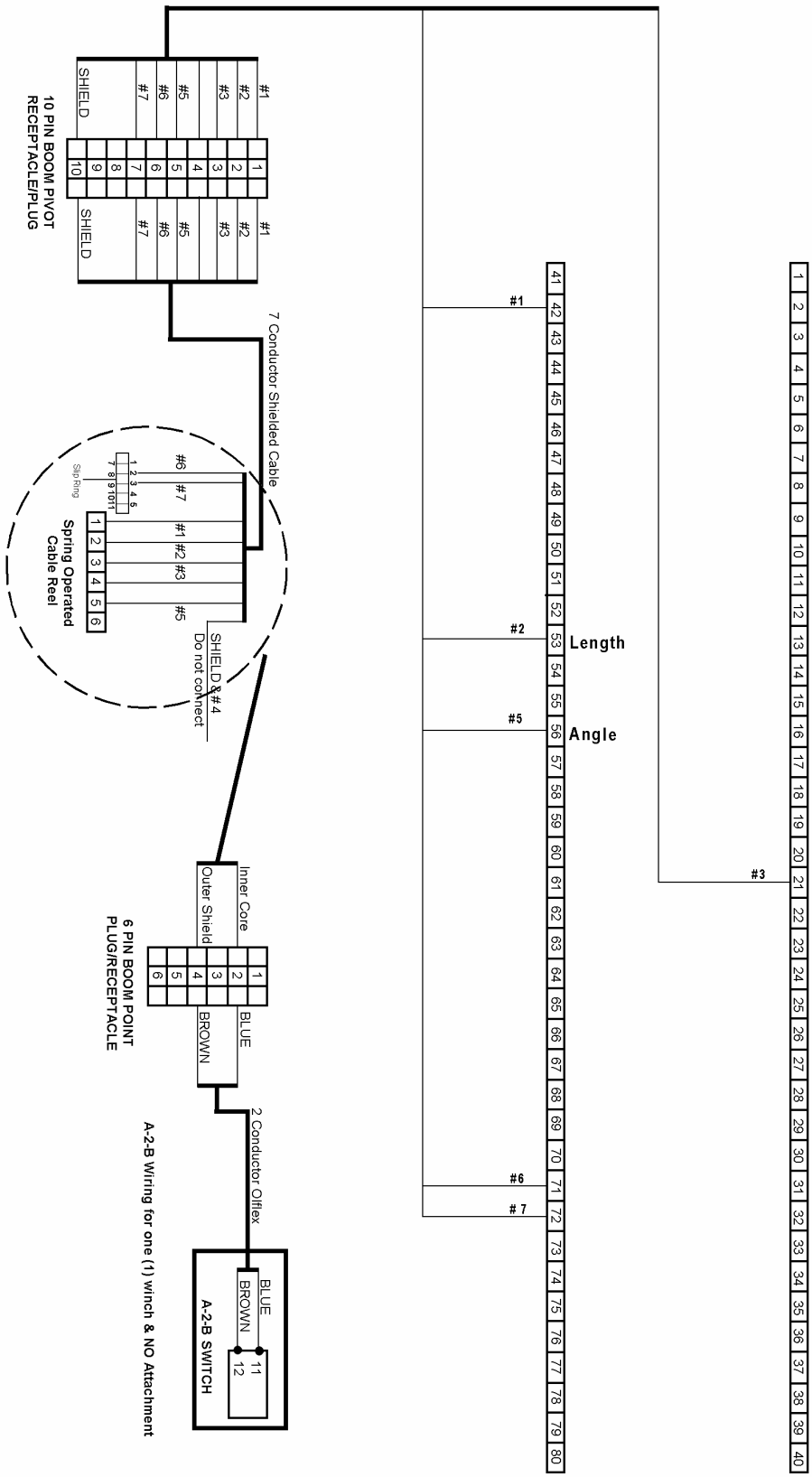

5.6 ELECTRICAL DIAGRAM - CABLE REEL (24/30 M) TO CENTRAL UNIT

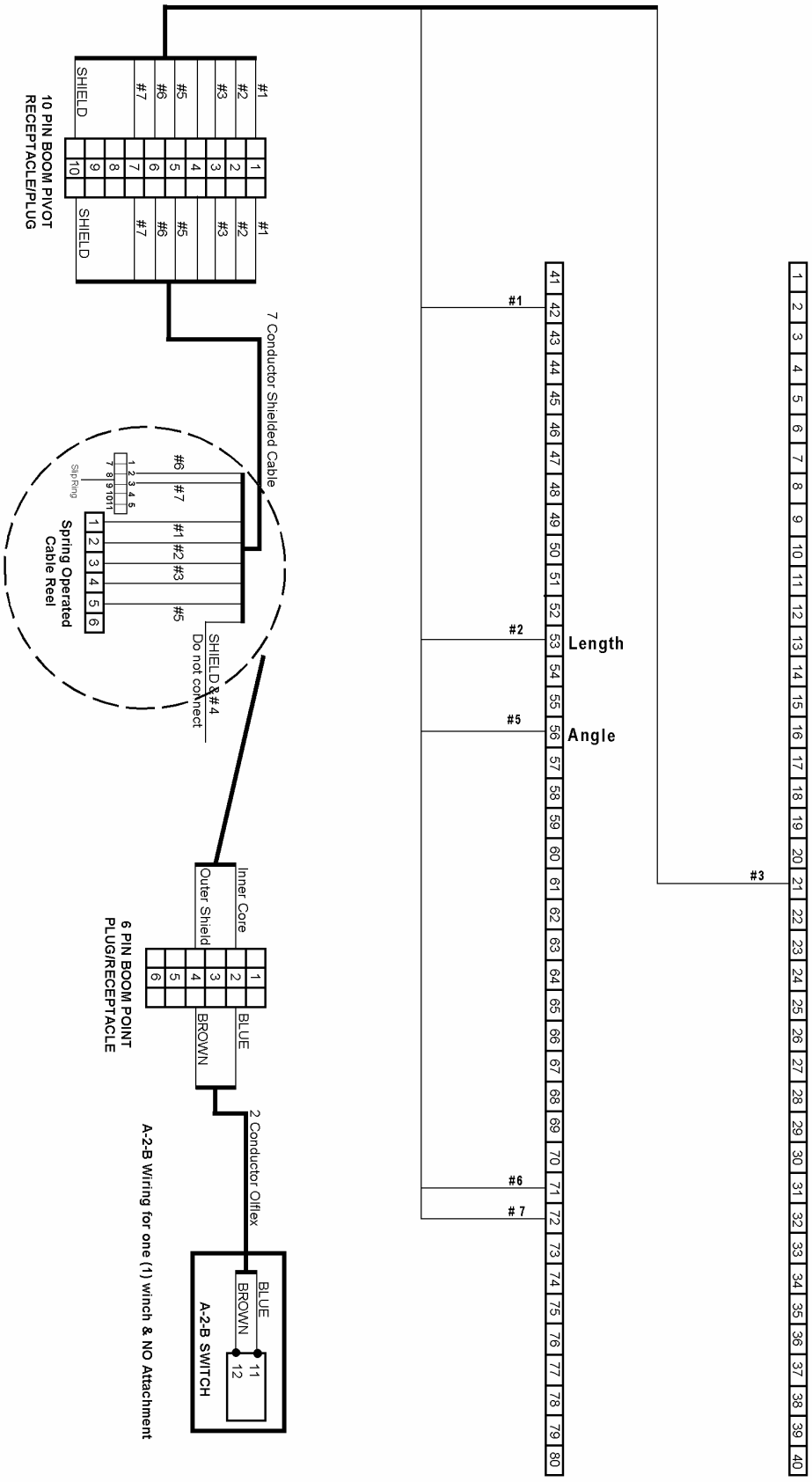

5.7 CABLE REEL 34/50 M

1-0115468.00 Spare Parts List

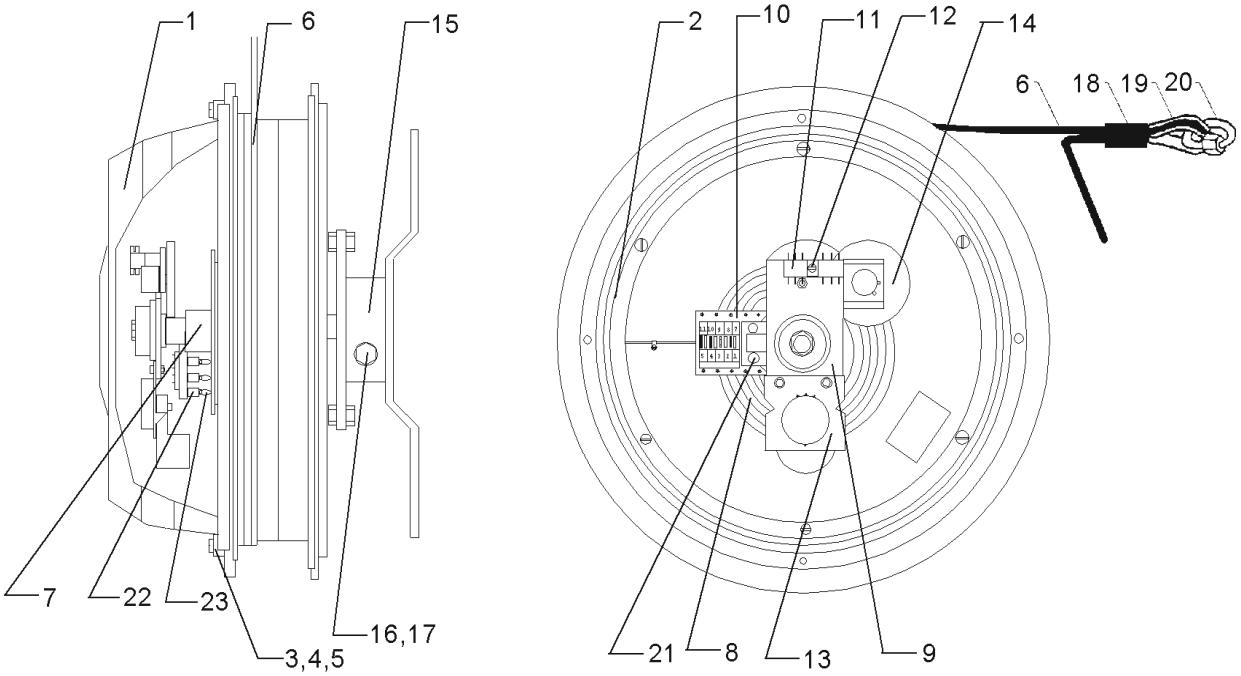

ITEM	DESCRIPTION	QTY	PART NUMBER
1	Cover Complete	1	1-0016897.00
	Cover	1	1-0010159.00
	Rubber Seal	1	1-0010631.00
2	Cable Reel Body	1	1-0010653.00
3	Angle Clamp	4	1-0010613.00
4	Slotted Flat Head Screw - M5 x 14	4	1-0012350.00
5	Nylon Washer - M5	4	1-0010581.00
6	Shielded Cable 1x1	45M	1-0102079.00
7	Receiver	1	1-0010615.00
8	Slip Ring Disk	1	1-0021448.00
9	Angle Bracket	1	1-0010175.00
10	Contact Holding Plate	1	1-0116041.00
11	Terminal Strip	1	1-0011684.00
12	Slotted Flat Head Screw - M4 x 10	1	1-0010582.00
13	Angle Transducer Complete	1	1-0015264.00
	Mount ing Plate	1	1-0010626.00
	Pot	1	1-0012157.00
	Pendulum	1	1-0010628.00
14	Gear Drive Complete	1	1-0021212.00
	Pot	1	1-0013697.00
15	Mounting Bracket	1	1-0027856.00
16	Hex Head Cap screw - M10 x 45	1	1-0012207.00
17	Lock Washer - M10	1	1-0010096.00
18	Shrink Tubing - Alpha 1/4" x 2"	1	1-0009986.00
19	Thimble	1	1-0009988.00
20	Thimble Link	1	1-0009987.00
21	Screw 2.3 mm slotted flat head	1	1-0011819.00
22	Contact Socket	3	1-0110095.00
23	Contact Pin	3	1-0110094.00

5.8 CABLE REEL 24/30 M

1-0115463.00 Spare parts List

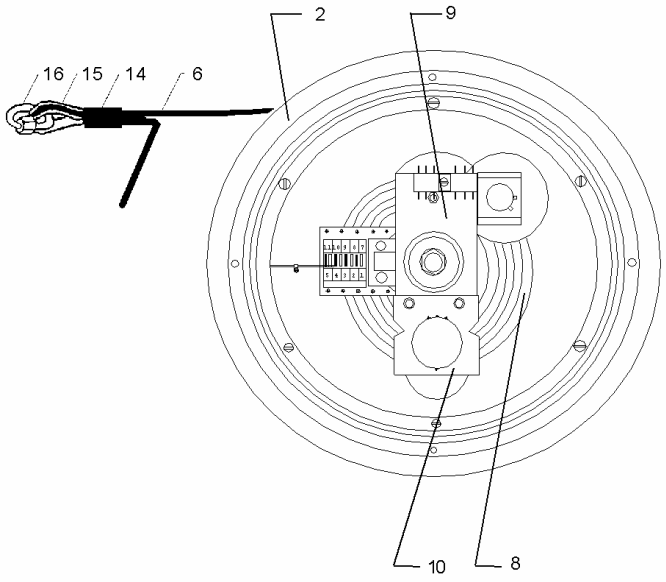

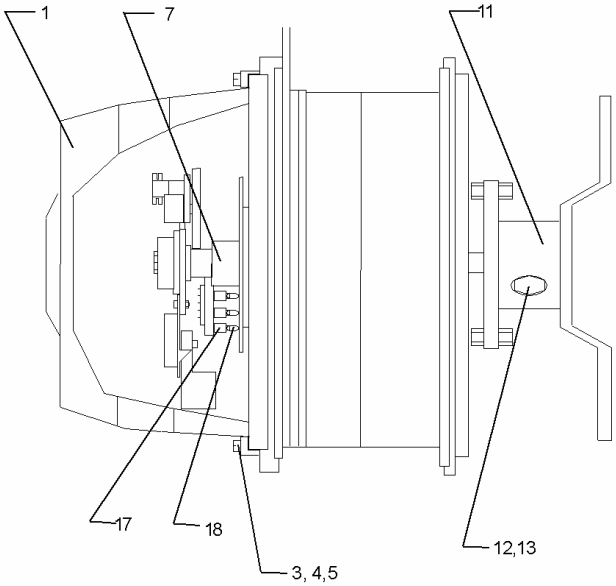

ITEM	DESCRIPTION	QTY	PART NUMBER
1	Cover Complete	1	1-0107886.00
2	Cable Reel Body	1	1-0107885.00
3	Angle Clamp	4	1-0010613.00
4	Slotted Flat Head Screw - M5 x 14	4	1-0012350.00
5	Nylon Washer - M5	4	1-0010581.00
6	Shielded Cable 1x1	30M	1-0102079.00
7	Receiver	1	1-0010615.00
8	Slip Ring Disk	1	1-0021448.00
9	Angle Bracket	1	1-0010175.00
10	Contact Holding Plate	1	1-0116041.00
11	Terminal Strip	1	1-0011684.00
12	Slotted Flat Head Screw - M4 x 10	1	1-0010582.00
13	Angle Transducer Complete	1	1-0015264.00
	Mounting Plate	1	1-0010626.00
	Pot	1	1-0012157.00
	Pendulum	1	1-0010628.00
14	Gear Drive Complete	1	1-0021212.00
	Pot	1	1-0013697.00
15	Mounting Bracket	1	1-0027856.00
16	Hex Head Cap screw - M10 x 45	1	1-0012207.00
17	Lock Washer - M10	1	1-0010096.00
18	Shrink Tubing - Alpha 1/4" x 2"	1	1-0009986.00
19	Thimble	1	1-0009988.00
20	Thimble Link	1	1-0009987.00
21	Screw 2.3 mm slotted flat head	1	1-0011819.00
22	Contact Socket	3	1-0110095.00
23	Contact Pin	3	1-0110094.00

5.8.1 Length Sensor Assembly:

Part Number: 1-0107887.00

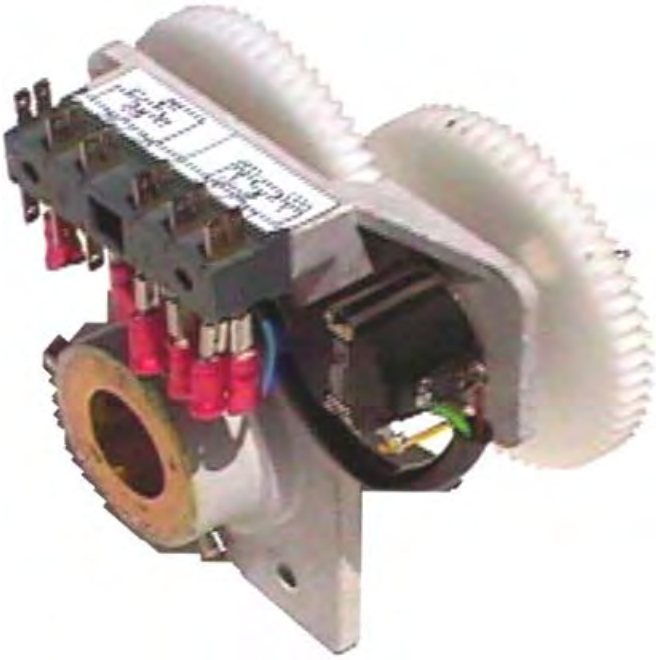

Length Potentiometer

5.8.2 Angle Sensor Assembly

Part Number: 1-0015601.00

5.9 ANTI-TWO-BLOCK ELECTRICAL DIAGRAM

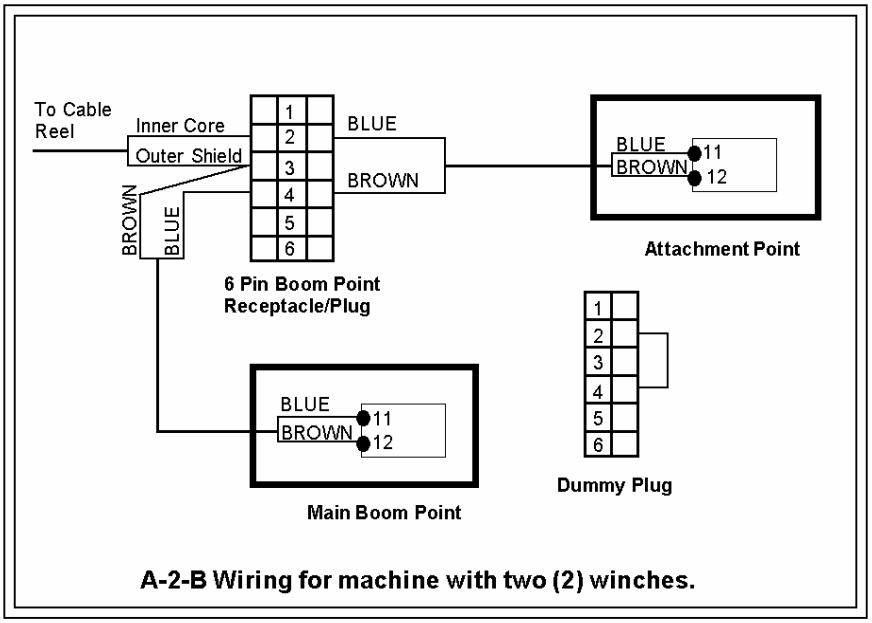

A-2-B Wiring for machine with two (2) winches.

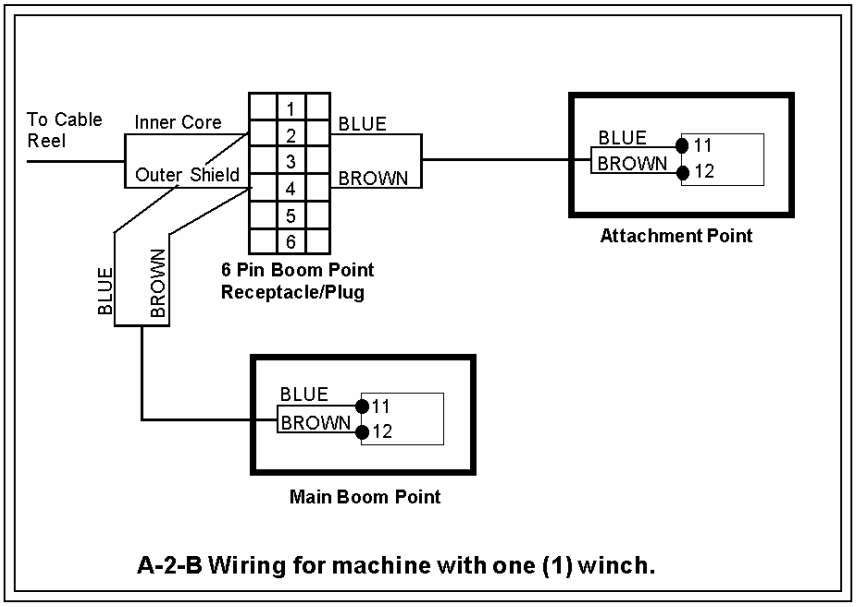

A-2-B Wiring for machine with one (1) winch.

5.10 ANTI-TWO BLOCK SWITCH

1-0024849.00 Spare parts List

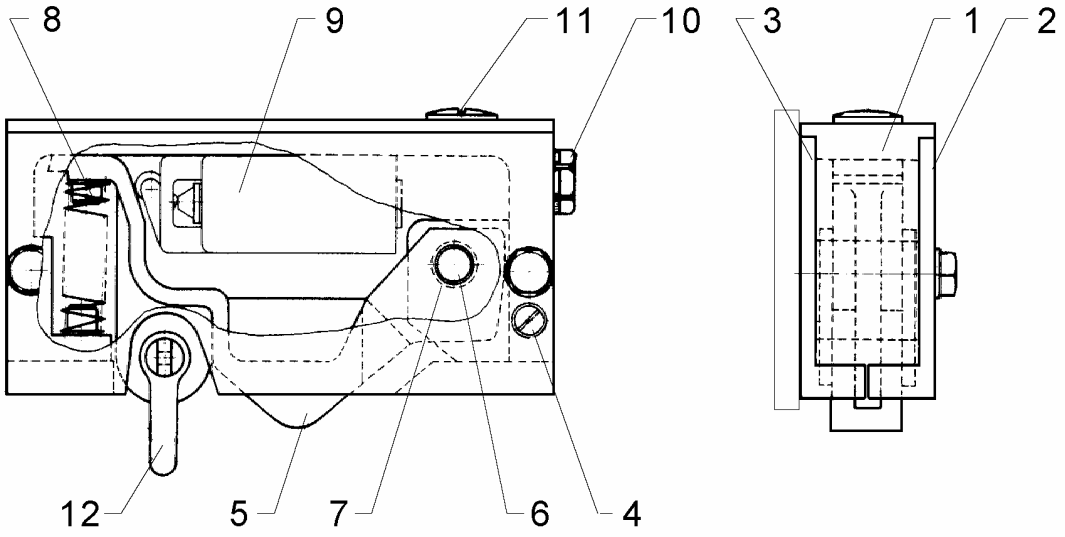

ITEM	DESCRIPTION	QTY	PART NUMBER
1	Center Housing	1	1-0112531.00
2	Cover - Left	1	1-0010045.00
3	Cover – Right	1	1-0010044.00
4	Slotted Flat Head Screw - M5 x 8	2	1-0013391.00
5	Lever	1	1-0010041.00
6	Straight Pin	1	1-0010042.00
7	Bushing	1	1-0010104.00
8	Spring	1	1-0100326.00
9	Micro Switch	1	1-0010039.00
10	Cable Connector	1	1-0010037.00
11	Blind Plug	1	1-0010038.00
12	Shackle with Cotter Pin	1	1-0009999.00

Required for Mounting - Order Separately

DESCRIPTION	QTY	PART NUMBER
Weld Plate	1	1-0010046.00
Hex Head Cap screw - M8 x 50	2	1-0010083.00
Lock Washer - M8	2	1-0010097.00

5.11 ELECTRICAL DIAGRAM – PRESSURE TRANSDUCER TO CENTRAL UNIT

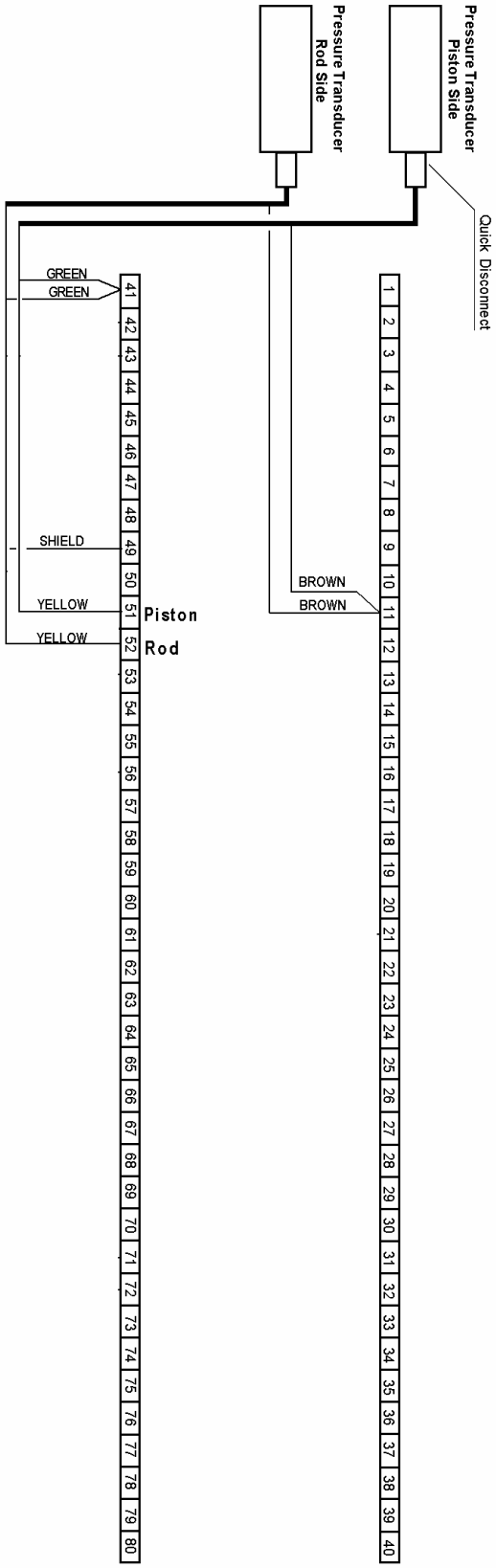

5.12 PRESSURE TRANSDUCER (250 BAR): 1-0108060.00

5.13 PRESSURE TRANSDUCER CABLE ASSEMBLY

(Part Number is depends cable length)

Connector Cable - Straight x 7M.	1-0114293.00
Connector Cable - Straight x 10M.	1-0114294.00
Connector Cable - 90° Connector	1-0101758.00

5.14 JUMPER CABLE ASSEMBLY FOR EXTENSION

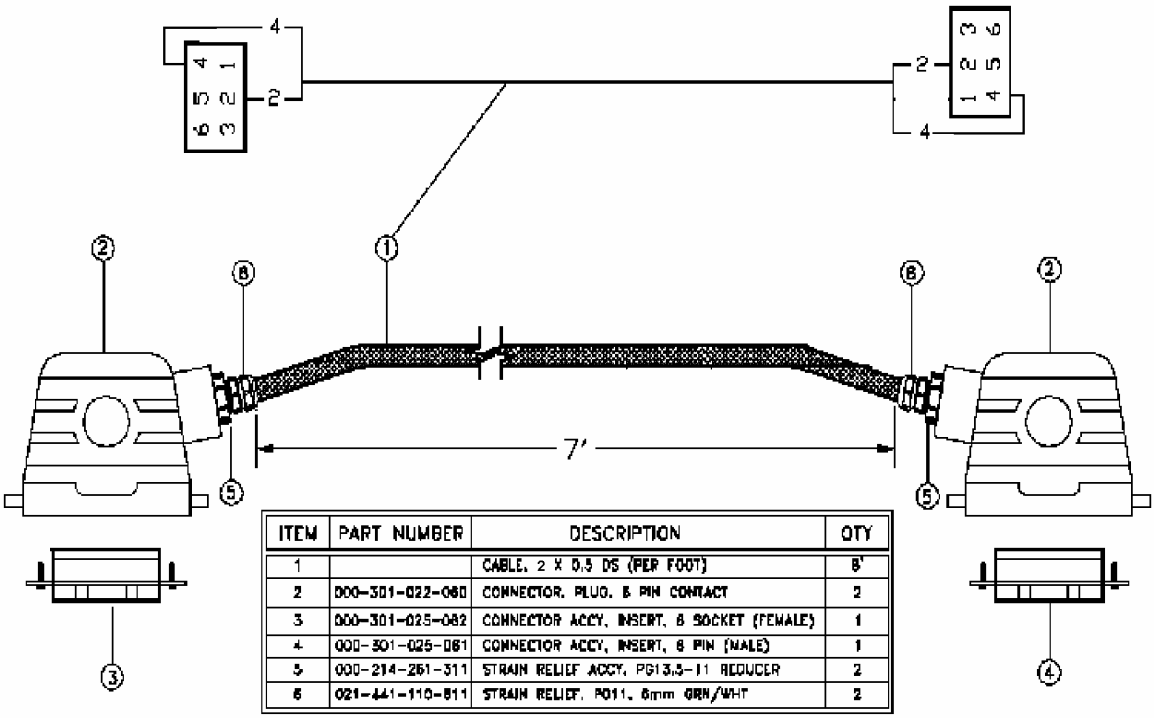

ITEM	PART NUMBER	DESCRIPTION	QTY
1		CABLE, 2 X 0.5 DS (PER FOOT)	8'
2	000-301-022-060	CONNECTOR, PLUG, 6 PIN CONTACT	2
3	000-301-025-062	CONNECTOR ACCY, INSERT, 6 SOCKET (FEMALE)	1
4	000-301-025-061	CONNECTOR ACCY, INSERT, 6 PIN (MALE)	1
5	000-214-251-311	STRAIN RELIEF ACCY, PG13.5-11 REDUCER	2
6	021-441-110-611	STRAIN RELIEF, PG11, 6mm GRN/WHT	2

6 PROCEDURES

This section will provide the user with step-by-step procedures to adjust or replace different system components. Please read through the replacement or adjustment procedures before you perform the task defined in the procedures to ensure you have positioned the crane/boom and have the necessary spare parts and tools. If a component replacement is necessary order the component from PAT America, Inc. before removing the component. Include Crane Model and Serial Number when ordering to allow PAT America technicians to test the potentiometer to ensure operation over the voltage range of the original system installation.

6.1 ANGLE SENSOR ADJUSTMENT

Part Number: 1-0115294.00

The angle ϕ shown in drawing below 1 needs to be within +0, -0.4 of the actual angle of the boom. Check boom angle at base/heel Section only. After adjustment, compare the actual boom angle with the displayed angle at about 0°, 30°, 60°, and 70°, 30-90° angles are more critical than 0-30°. To comply with the SAE J375 standards the displayed angle must be +0.0° to -2.0° of the actual angle.

Angle Transducer Pendulum Stop Set

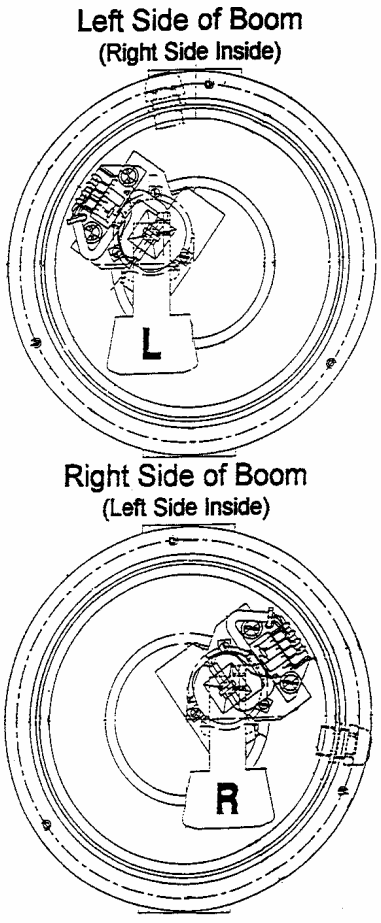

Angle Transducer

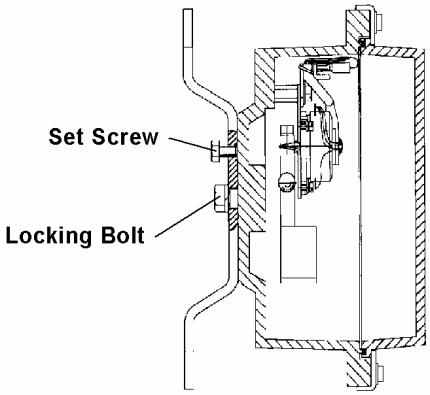

6.2 EPROM REPLACEMENT IN CENTRAL UNIT

1. Loosen screws and remove electronic box cover.

2. With power off to the system use small screwdriver to lift I.C. out of socket.

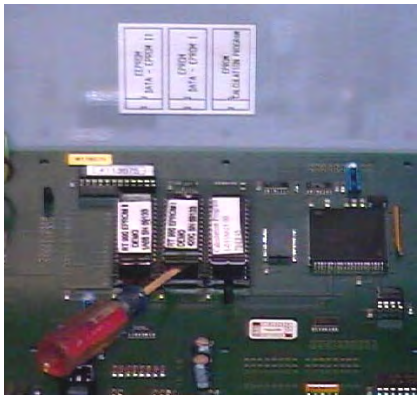

3. Replace I.C. with notch down and flat side to the top as shown in diagram.

WARNING: If I. C. is placed in wrong, the I.C. will be destroyed and a new I.C. will have to be ordered.

6.3 PISTON & ROD PRESSURE CHANNEL ADJUSTMENT

6.3.1 Adjust pressure piston:

1. Turn power off to the system and wire simulator to the piston pressure channel (blue to term. # 12, brown to term. #45, green/yellow to term. # 51). Put voltmeter ground on term. # 45 and positive to term. # 51.
2. Go to the Calibration menu by pushing the up then P button while in the Program menu screen.
3. Push up or down button until NORM menu title is blinking, then push P button.
4. Push up or down button until PRESSURE-PIS menu title is blinking, then push P button.
5. Adjust simulator to 2.500 vdc.
6. Push up or down button until MINIMUM menu title is blinking, then push P button.
7. Push P button until all digits have been verified with the proper value, which will be 000.00 bar.
8. Adjust simulator to 7.500 vdc. Push up or down button until MAXIMUM menu title is blinking, then push P button.
9. Push P button until all digits have been verified with the proper value, which will be 250.00 bar.
10. Push up or down button until ADJUST menu title is blinking then push P button.
11. Push down button until EXIT menu title is blinking then push P button.

6.3.2 Adjust pressure Rod:

12. Move positive lead of voltmeter to term. # 52.
13. Push up or down button until PRESSURE-ROD menu title is blinking then push P button.
14. Adjust simulator to 2.500 vdc.
15. Push up or down button until MINIMUM menu title is blinking then push P button.
16. Push P button until all digits have been verified with the proper value, which will be 000.00 bar.
17. Adjust simulator to 7.500 vdc
18. .Push up or down button until MAXIMUM menu title is blinking then push P button.
19. Push P button until all digits have been verified with the proper value, which will be 250.00 bar.
20. Push up or down button until ADJUST menu title is blinking then push P button.
21. Push down button until EXIT menu title is blinking then push P button.
22. Push down button to EXIT then P button until you get to the Program menu and enter the working display.

6.4 ANGLE TRANSDUCER REPLACEMENT AND ADJUSTMENT

Angle Transducer Replacement

Tools required:

- Soldering Iron
- 8mm Box wrench
- Needle Nose Pliers
- Digital Level Or Magnetic Base Angle Protractor
- Small Flat Blade Screwdriver

Procedure:

1. Fully retract the boom and lower to an 0 degree angle to access the cable reel mounted on the boom base section.
2. Turn off power to the Load Moment System.
3. Remove cable reel cover. Store the 4 screws, washers and clamps in a safe place.
4. Use the soldering iron and needle nose pliers to remove the three (3) wires from the angle potentiometer. WARNING! Before removing wires, make a diagram of their location.
5. With box end wrench, loosen the nut and remove the pendulum from the angle potentiometer.
6. Remove the three new angle potentiometer clamps and install the new angle potentiometer.
7. Use the soldering iron to connect the wires to the angle potentiometer using the diagram made in Step 4.
8. Supply power to the Load Moment System.
9. Adjust stem of the potentiometer to indicate 0 degrees then put pendulum on and tighten nut using 8mm wrench.
10. After putting pendulum on recheck for 0 degree indication. If panel agrees, tighten all nuts and screws.
11. If the angle displayed on the panel does NOT AGREE with the actual angle shown on the angle protractor proceed as follows:
12. Loosen, but DO NOT remove the three (3) screws holding the angle potentiometer clamps. SLOWLY rotate the Potentiometer until the angle indication on the panel is the same as the actual angle 0 degrees with boom level.
13. Tighten the 3 screws that hold the angle potentiometer clamps.
14. Boom up to the maximum angle possible. Be sure to verify the actual boom angle using the Magnetic base angle protractor or digital level.
15. If the angle displayed on the panel AGREES with the actual angle shown on the angle protractor or digital level go to step 15.
16. If the Angle displayed on the panel DOES NOT agree with the actual angle shown on theangle protractor or digital level proceed to angle adjustment procedure.
17. Lower boom and reinstall the cable reel cover.
18. The Angle Transducer has been replaced and adjusted. The machine can be put back into service.

Angle Transducer Adjustment

Tools required:

- Small flat blade screwdriver
- Digital Level or Magnetic base angle protractor

Procedure:

1. Fully retract the boom and lower to an angle 0 degrees or level.
2. Push the DOWN/ANGLE-LENGTH" (7) or UP/TARE" (9) button until NORM menu title is blinking then push the PROGRAM/BUZZER (8) button.
3. Push the DOWN/ANGLE-LENGTH" (7) or UP/TARE" (9) button until ANGLE menu title is blinking then push the PROGRAM/BUZZER (8) button.
4. Verify boom is at 0 degrees using digital level.
5. Push the DOWN/ANGLE-LENGTH" (7) or UP/TARE" (9) button until MINIMUM menu title is blinking then push the PROGRAM/BUZZER (8) button.
6. Push the PROGRAM/BUZZER (8) button until all digits have been verified with the proper value, which will be 000.0 at 0 degrees.
7. Hoist the boom all the way up and check angle using a digital level.
8. Push the DOWN/ANGLE-LENGTH" (7) or UP/TARE" (9) button until MAXIMUM menu title is blinking then push the PROGRAM/BUZZER (8) button.
9. Push the PROGRAM/BUZZER (8) button to the first digit that has to be changed to the angle value found by using the digital level. Change the digit value by pushing the DOWN/ANGLE-LENGTH" (7) or UP/TARE" (9) button until you get the proper number for that digit. Continue this process until at digit values have been corrected. For Example if the angle given by digital level was 76.5 degrees then the display should read 076.5 before the PROGRAM/BUZZER (8) button is pushed for the last time.
10. Push the DOWN/ANGLE-LENGTH" (7) or UP/TARE" (9) button until ADJUST menu title is blinking then push the PROGRAM/BUZZER (8) button.
11. Push the DOWN/ANGLE-LENGTH" (7) or UP/TARE" (9) button until EXIT menu title is blinking then push the PROGRAM/BUZZER (8) button.
12. Boom down to 60 degrees using crane angle indicator and verify angle with magnetic base protractor or digital level.

The Angle Transducer has been replaced and adjusted. The machine can be put back into service.

6.5 LENGTH TRANSDUCER REPLACEMENT AND ADJUSTMENT

Tools required:

- 1.5mm Allen Wrench
- 13mm Open End Wrench
- Medium Flat Blade Screwdriver
- Needle Nose Pliers
- Digital Volt-Ohm Meter

Procedure:

1. Locate machine in an area that will allow you to safely extend the boom to its full extension (Powered sections plus manual section).
2. Fully retract the boom and lower to an angle that will provide you with access to the cable reel mounted on the boom base section.
3. Turn off power to the Load Moment System.
4. Remove cable reel cover. Store the 4 screws, washers and clamps in a safe place.
5. Rotate the arm attached to the length potentiometer until the setscrew is accessible. Loosen, but DO NOT remove the setscrew.
6. Rotate the arm until the second setscrew is accessible. Loosen, but DO NOT remove the setscrew.
7. Remove the arm from the Length potentiometer and store in a safe location.
8. Remove the nylon gear from the length potentiometer shaft.
9. Use the 13mm wrench to remove the length potentiometer from the mounting bracket.
10. Use the soldering iron and needle nose pliers to remove the three (3) wires from the angle potentiometer. WARNING! Before removing wires make a diagram of their location.
11. Install the new length potentiometer in the mounting bracket. Tighten using 13 mm wrench.
12. Install the large nylon gear on the potentiometer shaft. Be sure that the brass spacer is facing toward the boom.
13. Install the lever arm on the potentiometer shaft and tighten both setscrews.
14. Use the soldering iron to connect the wires to the angle potentiometer using the diagram made in step 4.
15. Set VOLT-OHM meter to read OHMS. Place one probe on terminal #1 of the terminal strip and the other probe on terminal #2. Turn the lever arm until the meter indicates approximately 95 OHMS. Remove the meter from the circuit.
16. Supply power to the Load Moment System.
17. Follow system start up procedure to put the display panel in the normal operating mode.
18. With all boom sections FULLY RETRACTED rotate lever arm on the length potentiometer until the length displayed on the panel indicates the shortest boom length shown on the crane capacity chart.
19. FULLY EXTEND boom sections. Panel should display the maximum extended boom length of the load chart.
20. If the length displayed on the panel AGREES the machine can be put back in service.
21. If the length displayed DOES NOT AGREE go to LENGTH TRANSDUCER ADJUSTMENT.

Length Transducer Adjustment

Tools required: Medium screw driver
Procedure:

1. Locate machine in an area that will allow you to safely extend the boom to its full extension.
2. Fully retract the boom and lower to an angle that will provide you with access to the cable reel mounted on the boom base section. Open reel and adjust length voltage to 1.000 vdc measuring from terminal #1 to terminal #2 on the terminal strip in the cable reel
3. Push the DOWN/ANGLE-LENGTH" (7) or UP/TARE" (9) button until NORM menu title is blinking then push the PROGRAM/BUZZER (8) button.
4. Push the DOWN/ANGLE-LENGTH" (7) or UP/TARE" (9) button until LENGTH menu title is blinking then push the PROGRAM/BUZZER (8) button.
5. Verify boom is at fully retracted.
6. Push the DOWN/ANGLE-LENGTH" (7) or UP/TARE" (9) button until MINIMUM menu title is blinking then push the PROGRAM/BUZZER (8) button.
7. Push the PROGRAM/BUZZER (8) button until all digits have been verified with the proper value, which will be minimum boom length of the load chart.
8. Telescope the boom all the way out.
9. Push the DOWN/ANGLE-LENGTH" (7) or UP/TARE" (9) button until MAXIMUM menu title is blinking then push the PROGRAM/BUZZER (8) button.
10. Push the PROGRAM/BUZZER (8) button until all digits have been verified with the proper value, which will be maximum boom length of the load chart
11. Push the DOWN/ANGLE-LENGTH" (7) or UP/TARE" (9) button until ADJUST menu title is blinking then push the PROGRAM/BUZZER (8) button.
12. Push the DOWN/ANGLE-LENGTH" (7) or UP/TARE" (9) button until EXIT menu title is blinking then push the PROGRAM/BUZZER (8) button.
13. Push the DOWN/ANGLE-LENGTH" (7) button to EXIT then the PROGRAM/BUZZER (8) button until you get to the Program menu and enter the working display. Verify length values to load chart lengths.

The Length Transducer has been adjusted. The machine can be put back in service.

6.6 LENGTH CABLE REPLACEMENT

PROBLEM: Damaged or broken length cable.

Replace length cable using the following procedure:

1. Turn drum counter-clock wise until drum is fully tensioned.
2. Tighten locking nuts to drum to prevent recoil. Refer to Drawing 1 in Section 11 – Appendix.
3. Take reel cover off and remove screw and cable clamp.
4. Remove wire from slip ring disc cut wire ends off and remove all old length cable from reel.
5. Feed new length cable through drum. Strip wire, separate inner core from shield, insulate shield by using heat shrink or electrical tape, put spade lugs on and wire to slip ring disc terminals 2 and 3. Put cable clamp on and tighten screw to drum.
6. Put silicone around hole where the new length cable is fed through the drum.
7. While holding cable or drum, (Warning! To prevent recoil.) loosen locking nuts and jam the nuts together.
8. Slowly allow cable to spool onto the drum, keeping the cable tight together and layering properly, spool until all tension is off the cable reel.
9. Re string cable through the roller guides and reconnect at the boom tip.
10. After cable replacement refer to length adjustment procedure to reset length.
11. Put cover on reel. Crane is ready to put back into service.

7 TROUBLESHOOTING FLOW CHARTS

7.1 GENERAL FLOWCHART

This section explains how to handle a problem that may arise with the PAT Load Moment Indicator Kruger Mark 4E/2 System. The procedures are easy to follow and are given in flowcharts on the following pages. Start with the general flowchart below that will guide you to one of the other detailed flowcharts shown in this section.

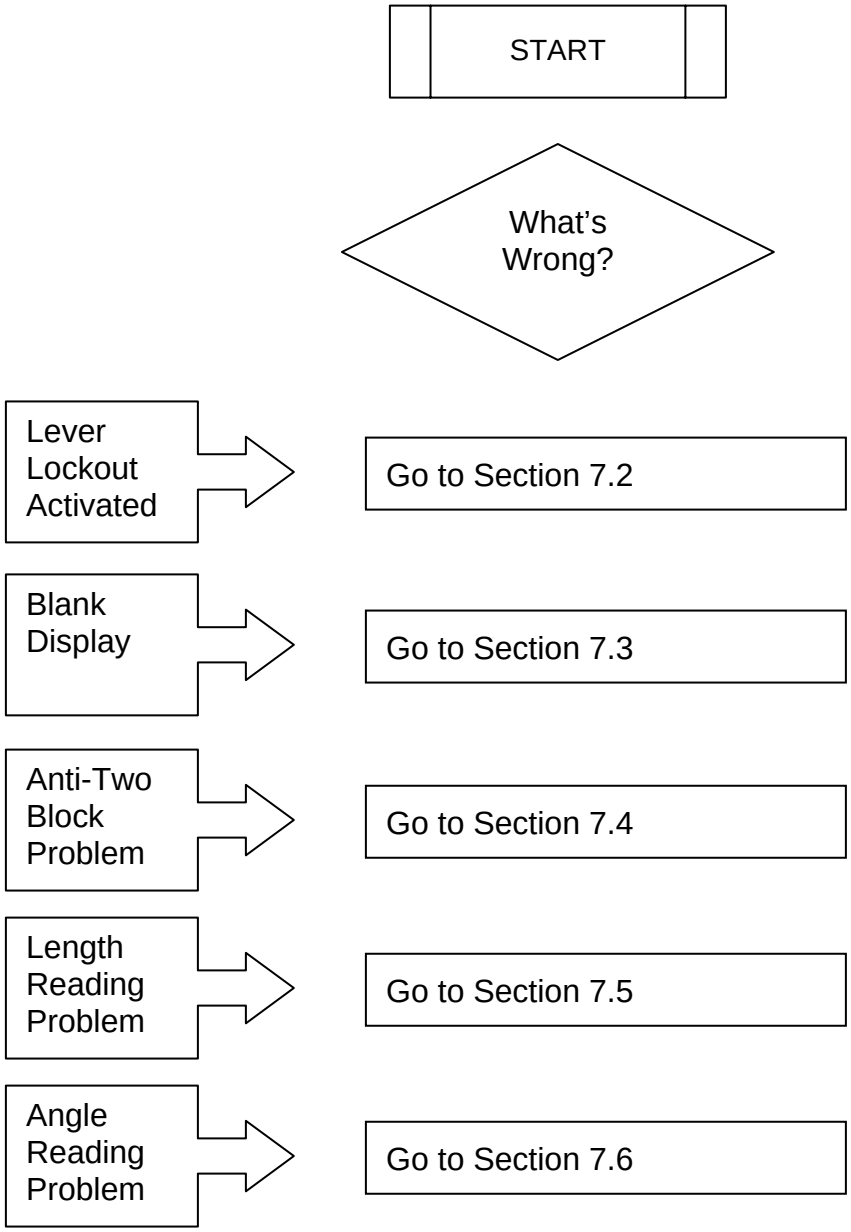

7.2 LEVER LOCKOUT ACTIVATED

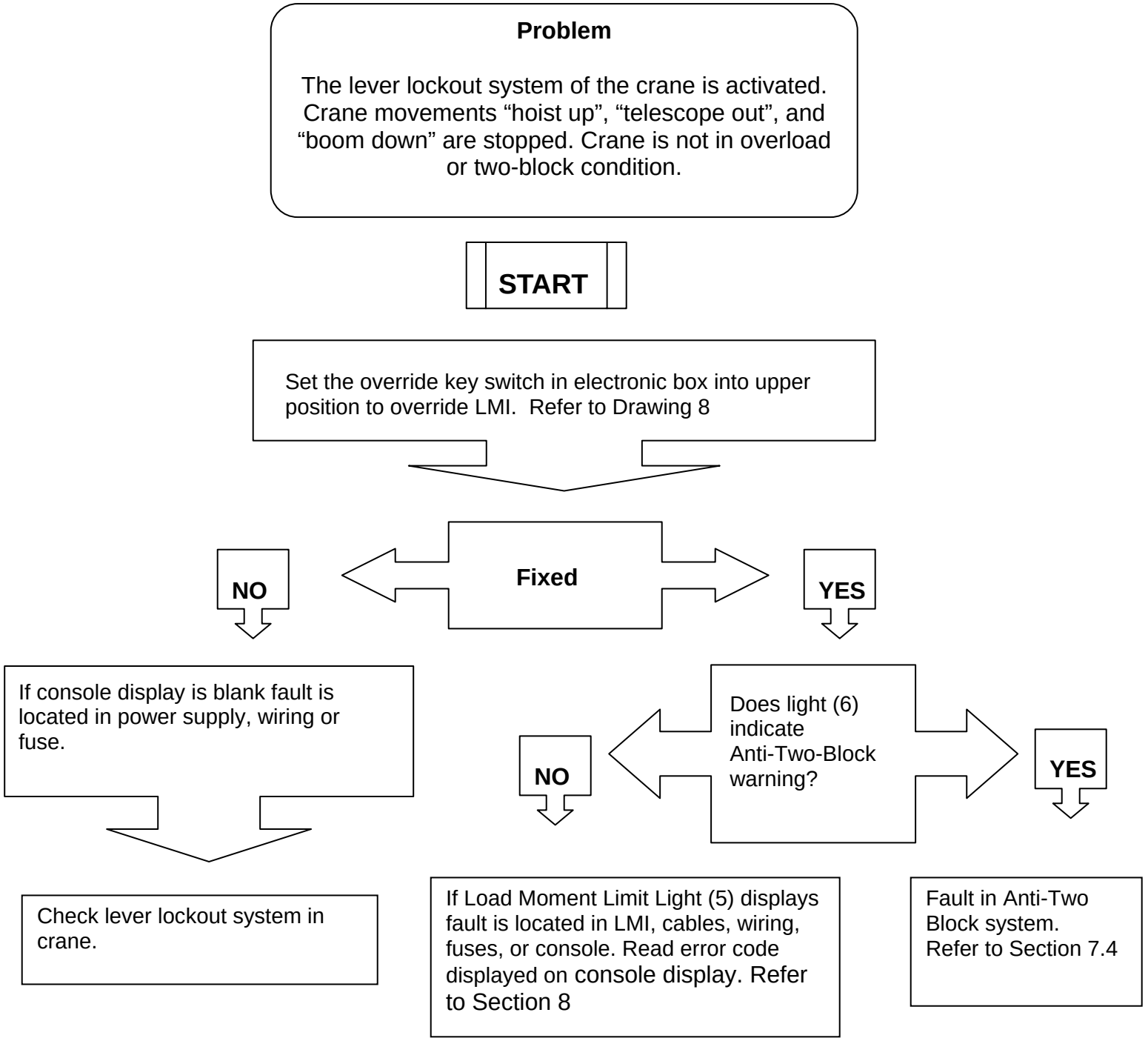

7.3 BLANK DISPLAY

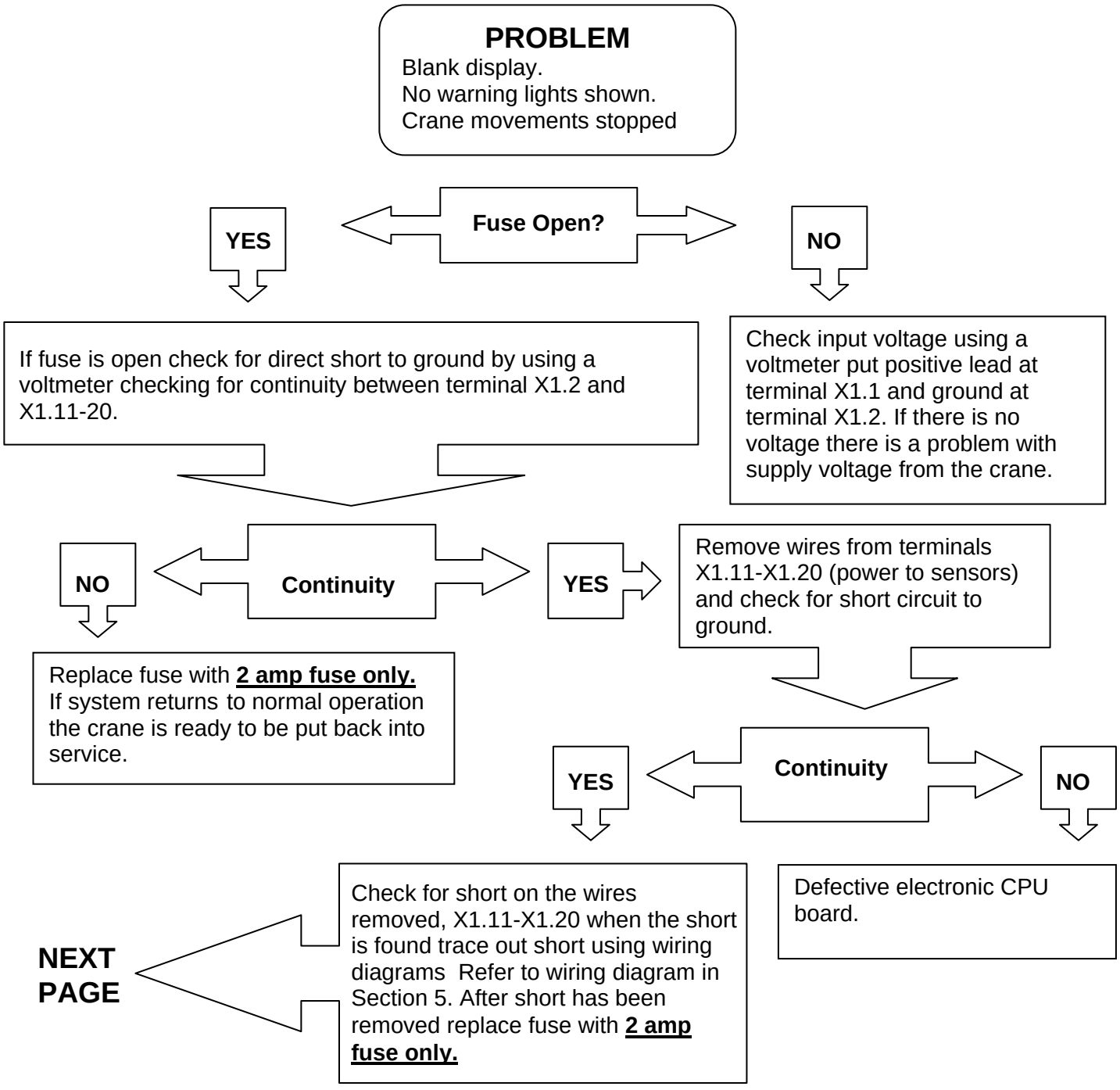

PREVIOUS PAGE

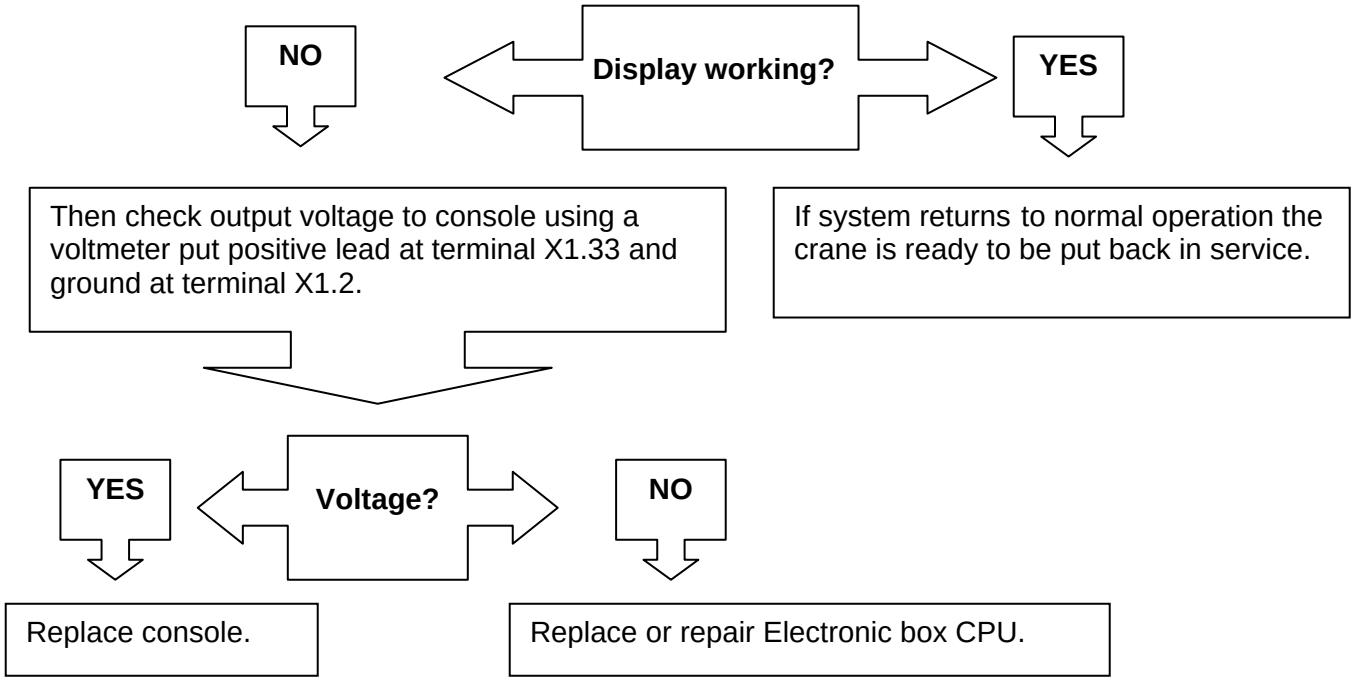

7.4 ANTI-TWO-BLOCK PROBLEM

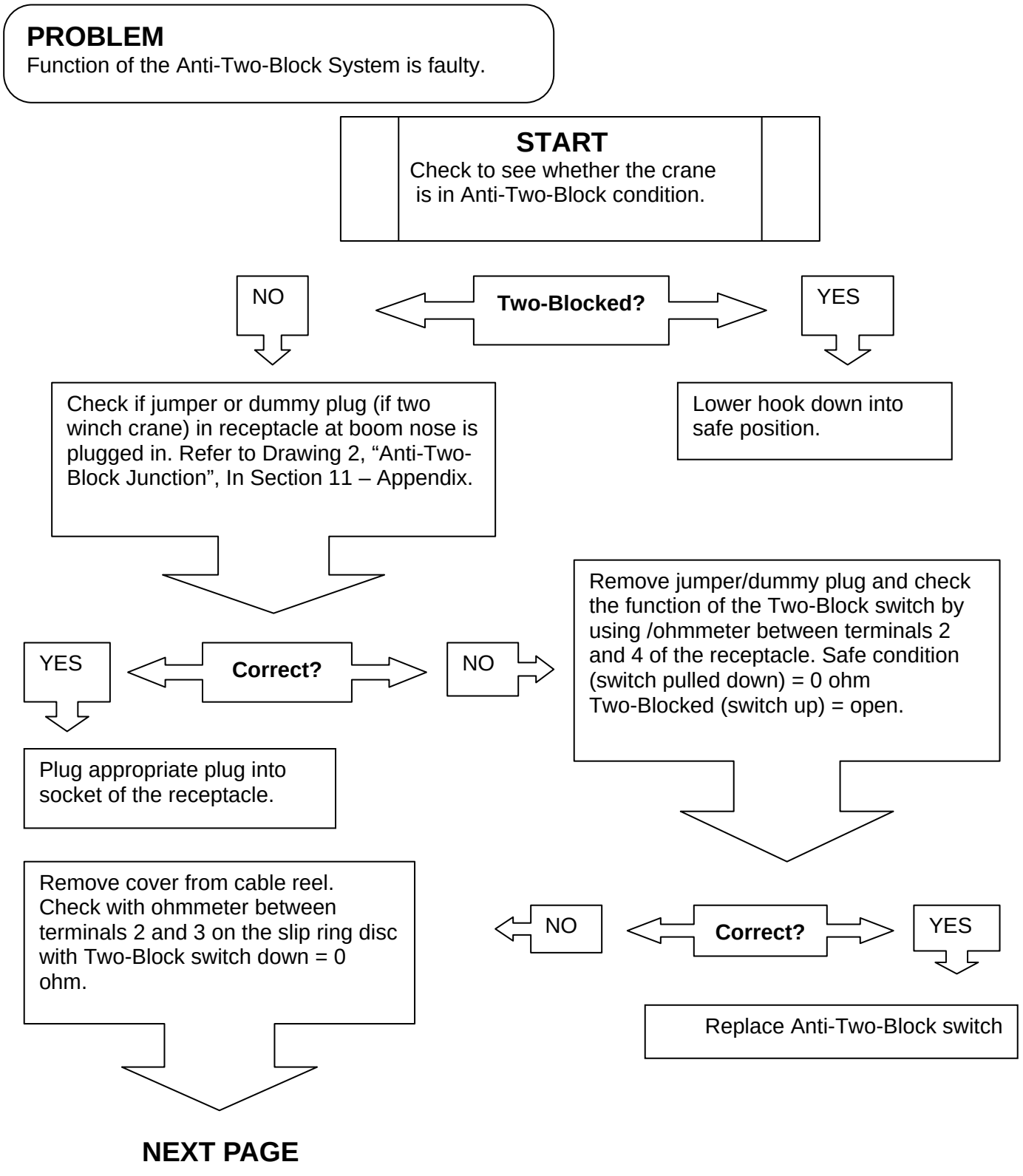

PREVIOUS PAGE

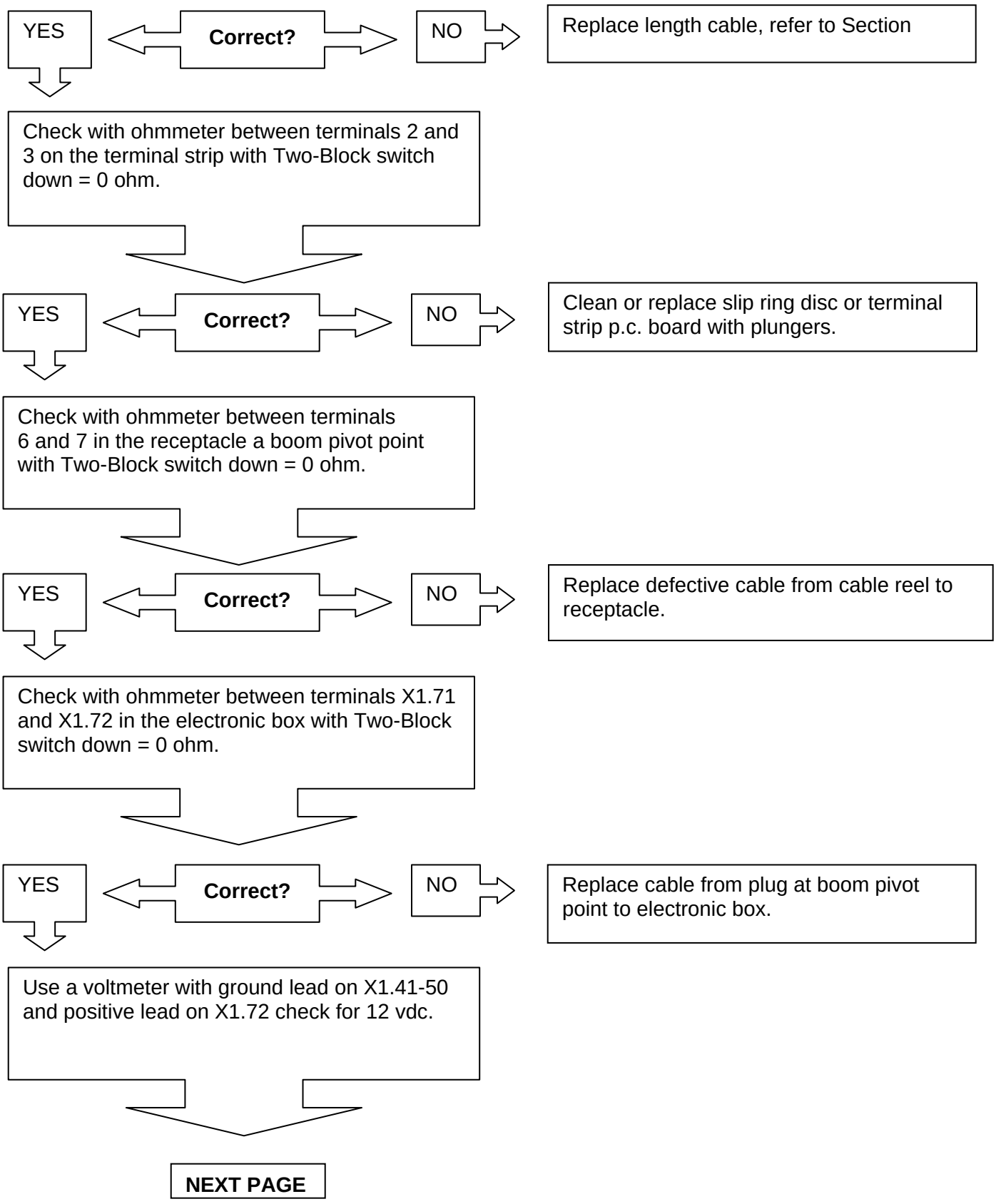

PREVIOUS PAGE

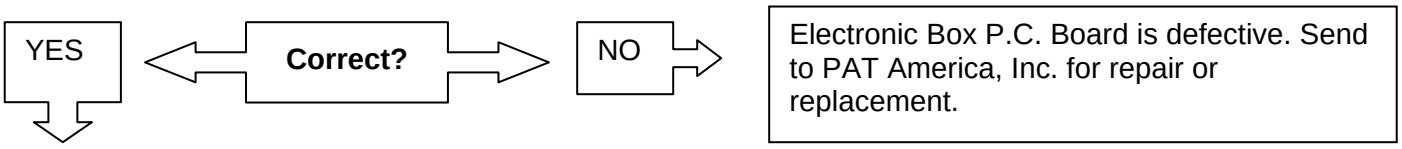

With 12vdc on terminal X1.72 and all checks have been completed you should have 12 vdc on terminal X1.71. If you have the correct voltages the Electronic Box P.C. Board is defective. Send to PAT America, Inc. for repair or replacement.

7.5 LENGTH READING PROBLEM

PROBLEM
Length reading is incorrect. Crane
Is not “out of load chart” condition?

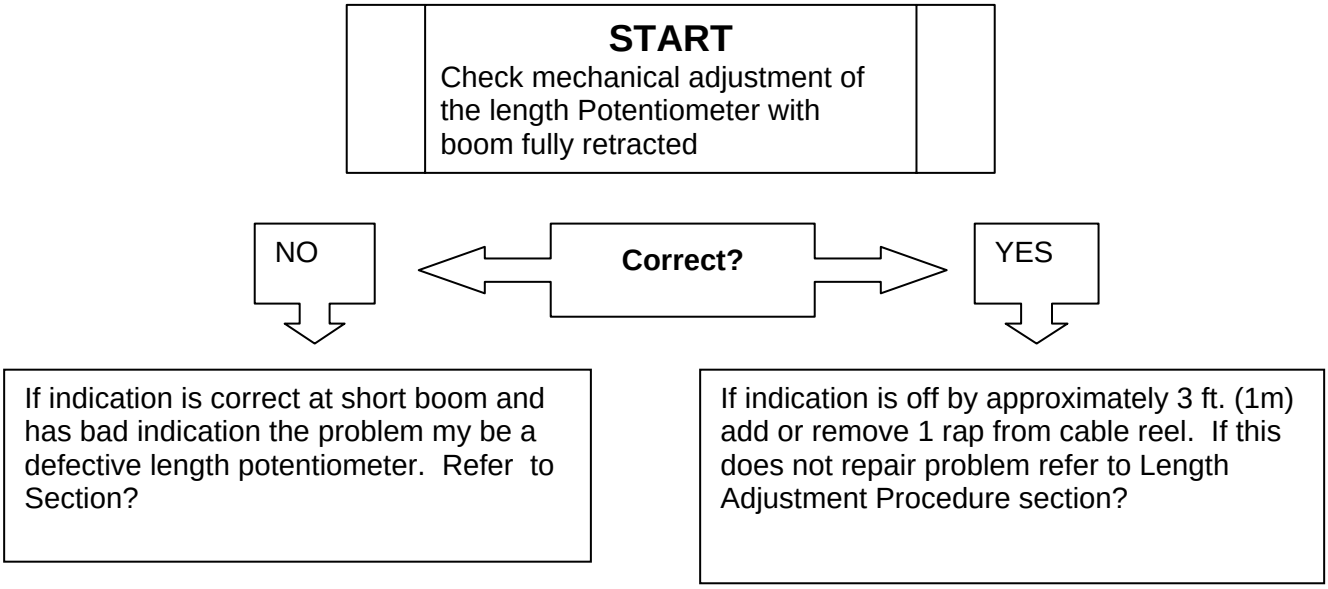

7.6 ANGLE READING PROBLEM

PROBLEM
Angle reading incorrect. Crane is not "out of load chart" condition.

START
Check mechanical adjustment of the angle Potentiometer with boom at 0 degrees Indication should match load chart.
Indication should match load chart.

NO ← **Correct?** → YES

If indication is correct at 0 degrees and has bad indication the problem my be defective length potentiometer.
Refer to Section 7.

If indication is off check the mechanical adjustment of the angle bracket.
Refer to Section 7.

8 ERROR CODES

8.1 OPERATOR ERROR CODE TABLE

Operation errors are measurement errors, i.e.; the actual radius is lower than in the load chart. The information will be shown on the second line of the display with an error message or description. The error will be automatically reset when user corrects error.

ERROR DISPLAYED	ERROR	CAUSE	ACTION
A2B CONDITION	Anti-2-Block circuit has been activated.	The hoist limit switch has been activated or open in A-2-B circuit.	Lower the hook. Check all cables and connection to hoist limit switch.
A2B BYPASS	The hoist limit switch has been by-passed.	The hoist limit by-pass button has been pushed or is defective.	Error occurs when bypass button on the panel is pushed.
LOAD > MAX LOAD	The actual load is greater than the max load.	The crane is at maximum lifting capacity.	Lower load or move load into safe working condition.
SHUT OFF BYPASS	The shut-off system is currently by-passed.	The shut-off contact has been by-passed by the user with the aid of the key operated switch installed on the electronic box.	Remove key from electronic box.
LENGTH < CHART	The length of the main boom is shorter than the lowest value in the Load Chart for the configuration selected.	The incorrect configuration has been selected. The length indication is incorrect.	Select proper configuration. Check length indication with boom fully retracted, if incorrect length is indicated Refer to Section 7.5
LENGTH > CHART	The length of the main boom is longer than the highest value in the Load Chart for the configuration selected.	The incorrect configuration has been selected. The length indication is incorrect.	Select proper configuration. Check length indication with boom fully extended, if incorrect length is indicated Refer to Section 7.5.
RADIUS < CHART	The Radius is shorter than the lowest value in the Load Chart for the configuration selected.	The crane has exceeded the shortest radius for the configuration that has been selected.	Lower or extend boom to return to a working radius in the load chart. Check radius indication to actual radius.
RADIUS > CHART	The Radius is longer than the highest value in the Load Chart for the configuration selected.	The crane has exceeded the longest radius for the configuration that has been selected.	Raise or retract boom to return to a working radius in the load chart. Check radius indication to actual radius.

ERROR DISPLAYED	ERROR	CAUSE	ACTION
ANGLE < CHART	The Angle of the main boom is lower than the lowest value in he Load Chart for the configuration selected.	The crane has exceeded the lowest angle for the configuration that has been selected.	Raise the boom to return to a working angle in the load chart.
ANGLE > CHART	The Angle of the main boom is higher than the highest value in the Load Chart for the configuration selected.	The crane has exceeded the highest angle for the configuration that has been selected.	Lower the boom to return to a working angle in the load chart..
SWING AREA	The crane has swung into a non-working area unacceptable to the Load Chart for the configuration selected.	The crane has swung into the wrong working range. May have defective roller switch or open wire to the roller switch.	Swing to return to a working rang. Replace defective roller switch. Replace wire from electronic box to roller switch.

8.2 SYSTEM ERROR CODE TABLE

System errors will occur if a system component has failed or been damaged and must be corrected. The system has to be reset after error has been corrected.

ERROR DISPLAYED	ERROR	CAUSE	ACTION
CH: 1 SHORT	Piston Pressure Transducer output voltage to low.	Defective pressure transducer or cable.	Replace pressure transducer or cable.
CH: 1 OPEN	Piston Pressure Transducer output voltage to high.	Defective pressure transducer or cable.	Replace pressure transducer or cable.
CH: 2 SHORT	Rod Pressure Transducer output voltage to low.	Defective pressure transducer or cable.	Replace pressure transducer or cable.
CH: 2 OPEN	Rod Pressure Transducer output voltage to high.	Defective pressure transducer or cable.	Replace pressure transducer or cable.
CH: 3 SHORT	Length Transducer output voltage to low.	Defective length transducer or cable.	Replace length transducer or cable.
CH: 3 OPEN	Length Transducer output voltage to high.	Defective length transducer or cable.	Replace length transducer or cable.
CH: 6 SHORT	Angle Transducer output voltage to low.	Defective angle transducer or cable.	Replace angle transducer or cable.
CH: 6 OPEN	Angle Transducer output voltage to high.	Defective angle transducer or cable.	Replace angle transducer or cable.
E: 0001 - 0042	LMB Error Codes	Errors occur from improper programming of data I.C.'s.	If problem recurs contact PAT America, Inc.
E: 1040	Error of division.	The system has tried to divide by zero.	Reset system by turning power off then on. If problem recurs contact PAT America, Inc.
E: 1041	Invalid interrupt vector.	The system has attempted to execute an interrupt that is in valid.	Reset system by turning power off then on. If problem recurs contact PAT America, Inc.
E: 1042	Incorrect CHECKSUM of EPROM 1.	Loss of data or invalid modification of EPROM 1.	Install new EPROM 1 with valid control program.
E: 1043	No real-time clock.	A EPROM 1 program for using data logger has been installed and pc board has no real-time clock or defective real-time clock.	Replace EPROM 1 with proper programming or replace pc board with real-time clock.
E: 1080 – 108D	Range Check Errors.	Errors occur from improper programming of data I. C.'s.	If problem reoccurs contact PAT America, Inc.
E: 10C0 – 10CE	Data Programming Errors EPROM 1.	Programming errors in EPROM 1.	If problem recurs contact PAT America, Inc.

ERROR DISPLAYED	ERROR	CAUSE	ACTION
E: 1100	Invalid EEPROM identification.	Incorrect EEPROM inserted in EEPROM 2 slot.	Replace the EEPROM with valid programming.
E: 1101	Incorrect "CHECKSUM" EEPROM (EPROM2)	Information has been changed in EPROM 2 and not checksum before turning power off to system.	With error message displayed push down button. Enter ACCESS code and CHECKSUM EEP then RESET.
E: 1102 – 110E	Data Programming Errors.	Invalid programming of EPROM 2.	If problem reoccurs contact PAT America, Inc.
E: F000	Error in shut-off circuit.	Fault on electronic box P.C. board.	Replace electronic box P.C. board.
E: F001	12 Volt DC fault.	The 12 Volt DC power supply voltage has dropped below 12 Volt DC –20%.	If crane is 12 volt check supply voltage of crane. If crane is 24 volt check for fault of 12/24 volt converter on electronic box P.C. board.
E: F002	ADC timeout.	Malfunction of A/D converter.	Replace electronic box P.C. board.
E: F040 – FE43	Hardware Error.	The system has a hardware failure.	Contact PAT America, Inc. or replace electronic box P.C. board.

9 CONNECTION DESCRIPTION CONSOLE/CENTRAL UNIT

The tables below show the connection terminal wire color and terminal description for the 7m long supplied cable between the console and central unit.

Connections to the central unit

Terminal	Function	Lead Color
X1:1	Supply voltage +12VDC (opt. 24VDC)	
X1:2	Input GND (OV)	
X1:3	Output Uref 3,8VDC, for slewing angle sensor	
X1:4	Output Uref 3,8VDC, for slewing angle sensor	
X1:5	Output Uref 1,0VDC, for slewing angle sensor	
X1:6	Output Uref 1,0VDC, for slewing angle sensor	
X1:7	Interface RS232 TxD	
X1:8	Interface RS232 RxD	
X1:9	Interface RSRS232 CTS	
X1:10	Interface RS232 DTR	
X1:11-20	+12VDC	
X1:21-26	+ 5VDC/Vref	
X1:27	Interface RS422 CLK+	Green (from indicator panel)
X1:28	Interface RS422 CLK-	Yellow (from indicator panel)
X1:29	Interface RS422 Data+	Grey (from indicator panel)
X1:30	Interface RS422 Data-	Pink (from indicator panel)
X1:31	Supply voltage indicator panel 24/12VDC	
X1:32	Supply voltage indicator panel, 0VDC (GND)	Brown (from indicator panel)
X1:33	Indicator panel +12VDC	White (from indicator panel)
X1:34	Indicator panel shut off	Jumper to X1.41
X1:35	Indicator panel RxD+	
X1:36	Indicator panel RxD-	
X1:37	Indicator panel TxD+	
X1:38	Indicator panel TxD-	
X1:39	Indicator panel heating GND	
X1:40	Indicator panel heating 24/12VDC	
X1:41-50	GND	
X1:51	Analog input 1 (Pressure transducer piston side)	
X1:52	Analog input 2 (Pressure transducer rod side)	
X1:53	Analog input 3 (length transducer)	
X1:54	Analog input 4	
X1:55	Analog input 5	
X1:56	Analog input 6 (angle transducer)	
X1:57	Analog input 7	
X1:58	Analog input 8	
X1:59	Interface RS422 Load +	Blue (from indicator panel)
X1:60	Interface RS422 Load -	Red (from indicator panel)
X1:61	Roller switch 1 Front rubber	
X1:62	Roller switch 2 Front/Rear outrigger	
X1:63	Roller switch 3	
X1:64	Roller switch 4	
X1:65	Roller switch 5	
X1:66	Down button	Grey/pink (from indicator panel)
X1:67	Prog button	Violet (from indicator panel)
X1:68	Up button	Black (from indicator panel)
X1:69	Roller switch GND 1…8	

X1:70	n.c.	
X1:71	Hoist limit switch	
X1:72	Hoist limit switch +12VDC	
X1:73	Bypass hoist limit switch	Red/blue (from indicator panel)
X1:74	Bypass hoist limit switch	
X1:75	Bypass LMI	
X1:76	Bypass LMI	
X1:77-78	Shutoff 1	
X1:79-80	Shutoff 2	

Console Table 1. Console connection

Terminal	**Description**	**Lead Color**
X1:1	+24VDC	White
X1:2	OVDC, GND	Brown
X1:3	RS422 CLK+	Green
X1:4	RS422 CLK-	Yellow
X1:5	RS422 DATA+	Grey
X1:6	RS422 DATA-	Pink
X1:7	RS422 Load+	Blue
X1:8	RS422 Load-	Red
X1:9	Push button UP/TARE”	Black
X1:10	Push button PROGRAM/BUZZER	Violet
X1:11	Push button DOWN/ANGLE-LENGTH”	Grey/pink
X1:12	Push button HOIST LIMIT SWITCH”	Red/blue

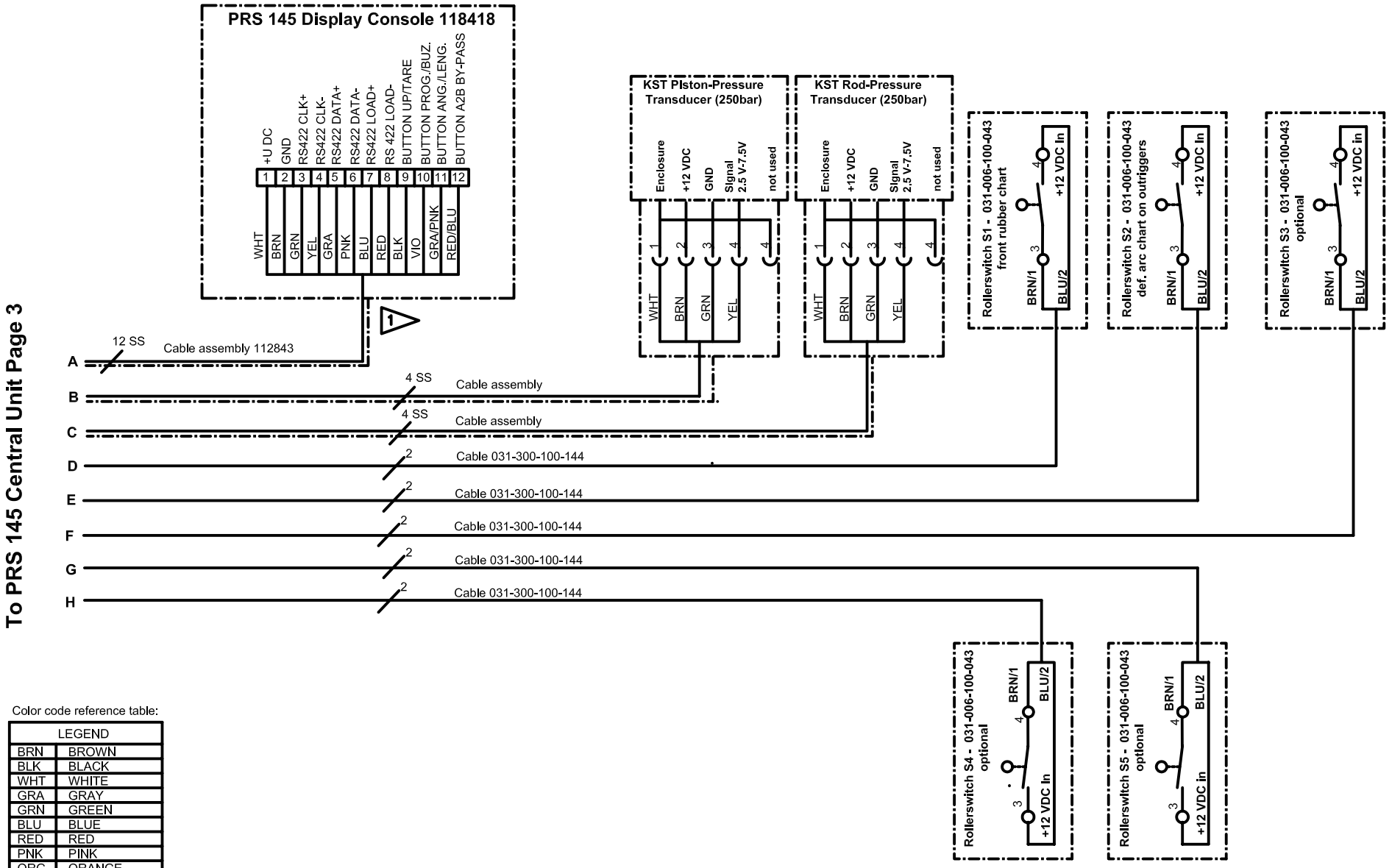

Color code reference table:

LEGEND	
BRN	BROWN
BLK	BLACK
WHT	WHITE
GRA	GRAY
GRN	GREEN
BLU	BLUE
RED	RED
PNK	PINK
ORG	ORANGE
YEL	YELLOW
VIO	VIOLET
SHD	SHIELD
CRE	CREAM
IS	INNER SHIELD
SS	SINGLE SHIELDED
DS	DOUBLE SHIELDED
NC	NOT CONNECTED

Notes:

1. Shield connected to strain relief Insert

PAT AMERICA, Inc.
1665 ORCHARD DRIVE
CHAMBERSBURG, PA 17201

PRS 145 w/ LWG 208 (Voltage) & KST P-Transducers

GENERAL TOLERANCES

P/N **031-300-101-xxx**

REV	ECN	DESCRIPTION	BY	APV	DATE

DRAWN WB DATE 10/03/2003
APPROVED DATE
SCALE:
SHEET: 1 of 4
SIZE A
DWG NO.
REV
ECN
C.A.G.E. 79760

PAT America Inc. reserves proprietary rights to this drawing and to the data shown thereon. The drawing and data are confidential and are not to be used or reproduced without the written consent of PAT America Inc. This drawing is subject to technical modification without prior notice.

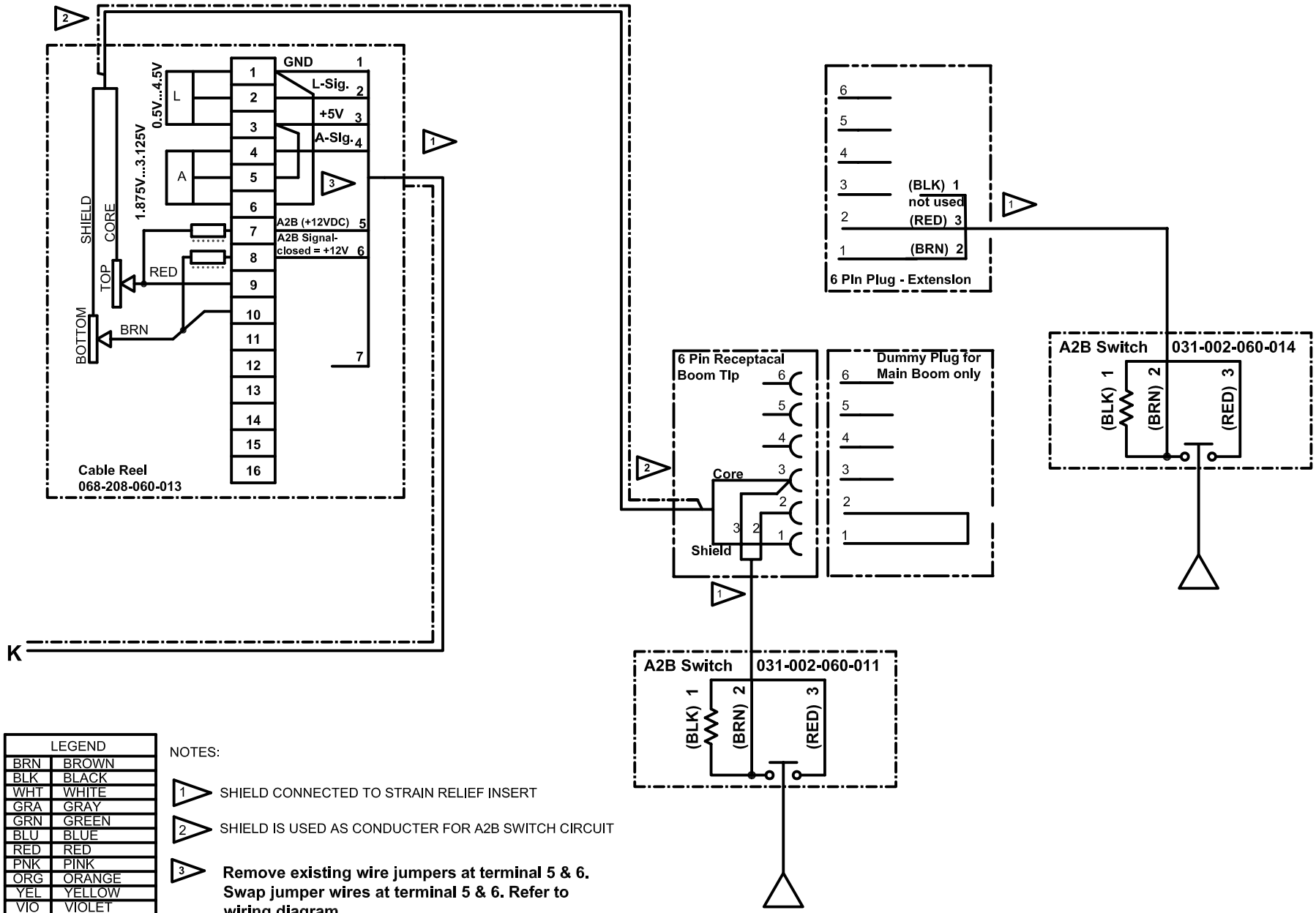

LEGEND	
BRN	BROWN
BLK	BLACK
WHT	WHITE
GRA	GRAY
GRN	GREEN
BLU	BLUE
RED	RED
PNK	PINK
ORG	ORANGE
YEL	YELLOW
VIO	VIOLET
SHD	SHIELD
CRE	CREAM
IS	INNER SHIELD
SS	SINGLE SHIELDED
DS	DOUBLE SHIELDED
NC	NOT CONNECTED

NOTES:

1. SHIELD CONNECTED TO STRAIN RELIEF INSERT
2. SHIELD IS USED AS CONDUCTER FOR A2B SWITCH CIRCUIT
3. **Remove existing wire jumpers at terminal 5 & 6. Swap jumper wires at terminal 5 & 6. Refer to wiring diagram.**

PAT AMERICA, Inc.
1665 ORCHARD DRIVE
CHAMBERSBURG, PA 17201

PRS 145 w/ LWG 208 (voltage) & KST P-Transducers

GENERAL TOLERANCES

P/N **031-300-101-xxx**

REV	ECN	DESCRIPTION	BY	APV	DATE

DRAWN WB DATE 09/29/2003
APPROVED DATE
SCALE: SHEET: 2 of 4 SHEET
SIZE A DWG NO. REV
ECN
C.A.G.E. 79760

PAT America Inc. reserves proprietary rights to this drawing and to the data shown thereon. The drawing and data are confidential and are not to be used or reproduced without the written consent of PAT America Inc. This drawing is subject to technical modification without prior notice.

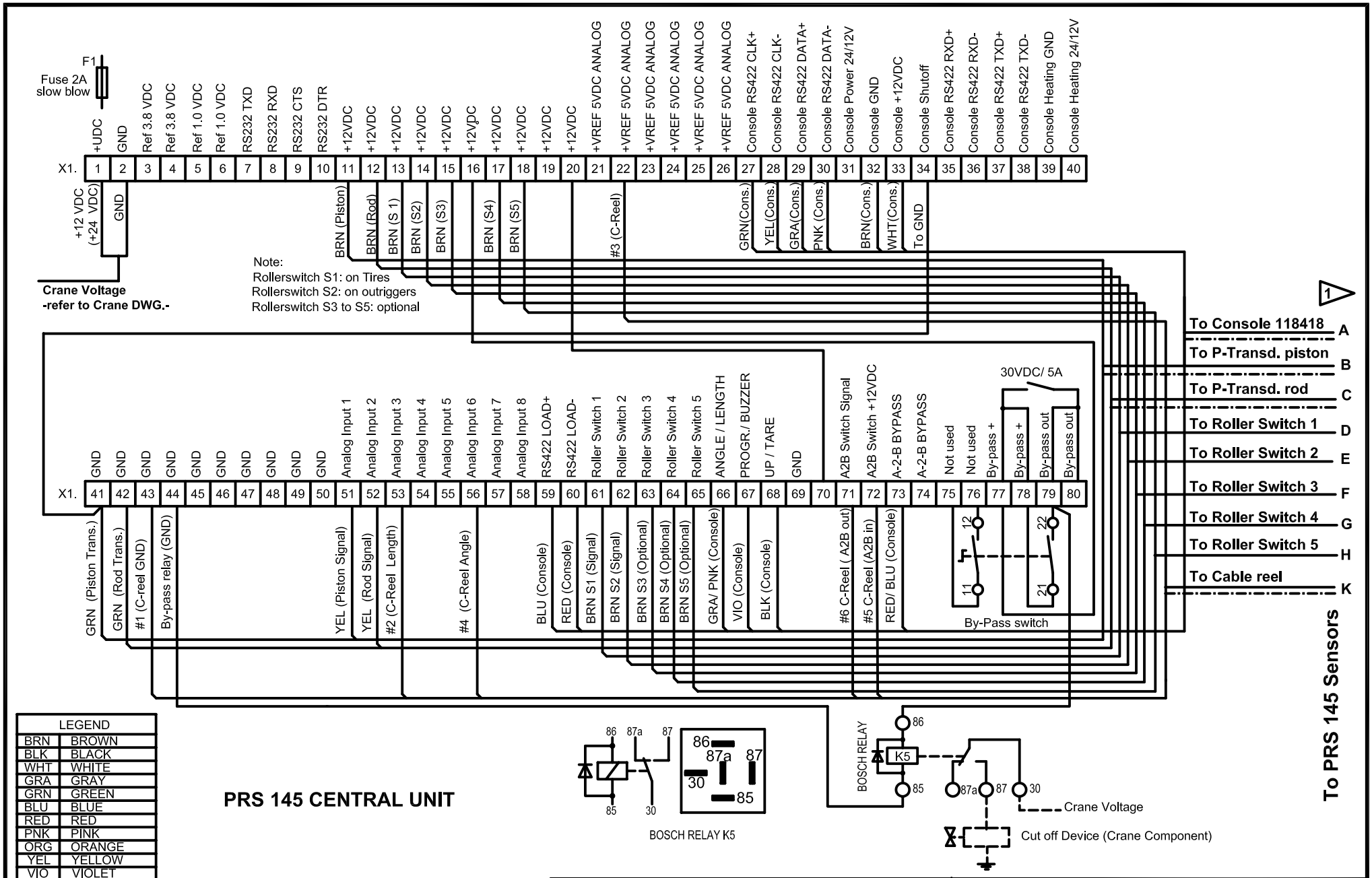
F1
Fuse 2A slow blow
X1.
+UDC
GND
Ref 3.8 VDC
Ref 3.8 VDC
Ref 1.0 VDC
Ref 1.0 VDC
RS232 TXD
RS232 RXD
RS232 CTS
RS232 DTR
+12VDC
+VREF 5VDC ANALOG
Console RS422 CLK+
Console RS422 CLK-
Console RS422 DATA+
Console RS422 DATA-
Console Power 24/12V
Console GND
Console +12VDC
Console Shutoff
Console RS422 RXD+
Console RS422 RXD-
Console RS422 TXD+
Console RS422 TXD-
Console Heating GND
Console Heating 24/12V
+12 VDC (+24 VDC)
Crane Voltage
-refer to Crane DWG.-
BRN (Piston)
BRN (Rod)
BRN (S 1)
BRN (S2)
BRN (S3)
BRN (S4)
BRN (S5)
#3 (C-Reel)
GRN(Cons.)
YEL(Cons.)
GRA(Cons.)
PNK (Cons.)
BRN(Cons.)
WHT(Cons.)
To GND
Note:
Rollerswitch S1: on Tires
Rollerswitch S2: on outriggers
Rollerswitch S3 to S5: optional
To Console 118418
To P-Transd. piston
To P-Transd. rod
To Roller Switch 1
To Roller Switch 2
To Roller Switch 3
To Roller Switch 4
To Roller Switch 5
To Cable reel
30VDC/ 5A
Analog Input 1
Analog Input 2
Analog Input 3
Analog Input 4
Analog Input 5
Analog Input 6
Analog Input 7
Analog Input 8
RS422 LOAD+
RS422 LOAD-
Roller Switch 1
Roller Switch 2
Roller Switch 3
Roller Switch 4
Roller Switch 5
ANGLE / LENGTH
PROGR./ BUZZER
UP / TARE
A2B Switch Signal
A2B Switch +12VDC
A-2-B BYPASS
A-2-B BYPASS
Not used
Not used
By-pass +
By-pass +
By-pass out
By-pass out
GRN (Piston Trans.)
GRN (Rod Trans.)
#1 (C-reel GND)
By-pass relay (GND)
YEL (Piston Signal)
YEL (Rod Signal)
#2 (C-Reel Length)
#4 (C-Reel Angle)
BLU (Console)
RED (Console)
BRN S1 (Signal)
BRN S2 (Signal)
BRN S3 (Optional)
BRN S4 (Optional)
BRN S5 (Optional)
GRA/ PNK (Console)
VIO (Console)
BLK (Console)
#6 C-Reel (A2B out)
#5 C-Reel (A2B in)
RED/ BLU (Console)
By-Pass switch
To PRS 145 Sensors
PRS 145 CENTRAL UNIT
BOSCH RELAY K5
BOSCH RELAY
K5
Crane Voltage
Cut off Device (Crane Component)
LEGEND
BRN BROWN
BLK BLACK
WHT WHITE
GRA GRAY
GRN GREEN
BLU BLUE
RED RED
PNK PINK
ORG ORANGE
YEL YELLOW
VIO VIOLET
SHD SHIELD
CRE CREAM
IS INNER SHIELD
SS SINGLE SHIELDED
DS DOUBLE SHIELDED
NC NOT CONNECTED
SHIELD CONNECTED TO STRAIN RELIEF INSERT
PAT AMERICA, Inc.
1665 ORCHARD DRIVE
CHAMBERSBURG, PA 17201
PRS 145 w/ LWG 208 (Voltage) & KST P-Transducers
GENERAL TOLERANCES
P/N 031-300-101-xxx
REV ECN DESCRIPTION BY APV DATE
DRAWN WB DATE 09/29/2003
APPROVED DATE
SCALE: SHEET: 3 of 4 SHEET
SIZE A DWG NO. REV
ECN
C.A.G.E. 79760
PAT America Inc. reserves proprietary rights to this drawing and to the data shown thereon. The drawing and data are confidential and are not to be used or reproduced without the written consent of PAT America Inc. This drawing is subject to technical modification without prior notice.

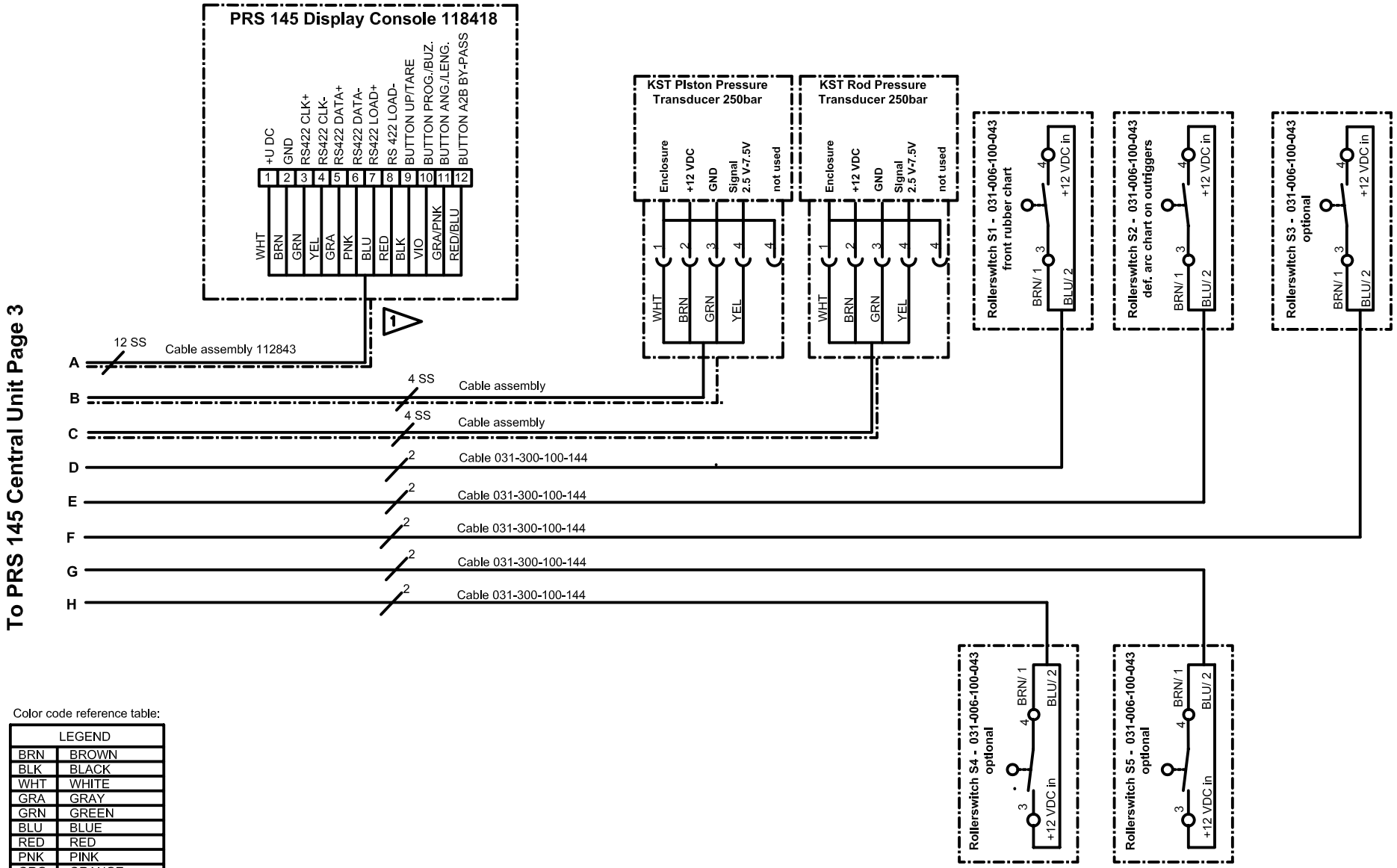

Color code reference table:

LEGEND	
BRN	BROWN
BLK	BLACK
WHT	WHITE
GRA	GRAY
GRN	GREEN
BLU	BLUE
RED	RED
PNK	PINK
ORG	ORANGE
YEL	YELLOW
VIO	VIOLET
SHD	SHIELD
CRE	CREAM
IS	INNER SHIELD
SS	SINGLE SHIELDED
DS	DOUBLE SHIELDED
NC	NOT CONNECTED

Notes:

1. Shield connected to strain relief insert

PAT AMERICA, Inc.
1665 ORCHARD DRIVE
CHAMBERSBURG, PA 17201

PRS 145 w/ LWG 308 & KST P-Transducers

GENERAL TOLERANCES

P/N 031-300-101-xxx

REV	ECN	DESCRIPTION	BY	APV	DATE

DRAWN WB DATE 09/29/2003

APPROVED DATE

SCALE: SHEET: 1 of 4

SIZE A DWG NO. REV

ECN

C.A.G.E. 79760

PAT America Inc. reserves proprietary rights to this drawing and to the data shown thereon. The drawing and data are confidential and are not to be used or reproduced without the written consent of PAT America Inc. This drawing is subject to technical modification without prior notice.

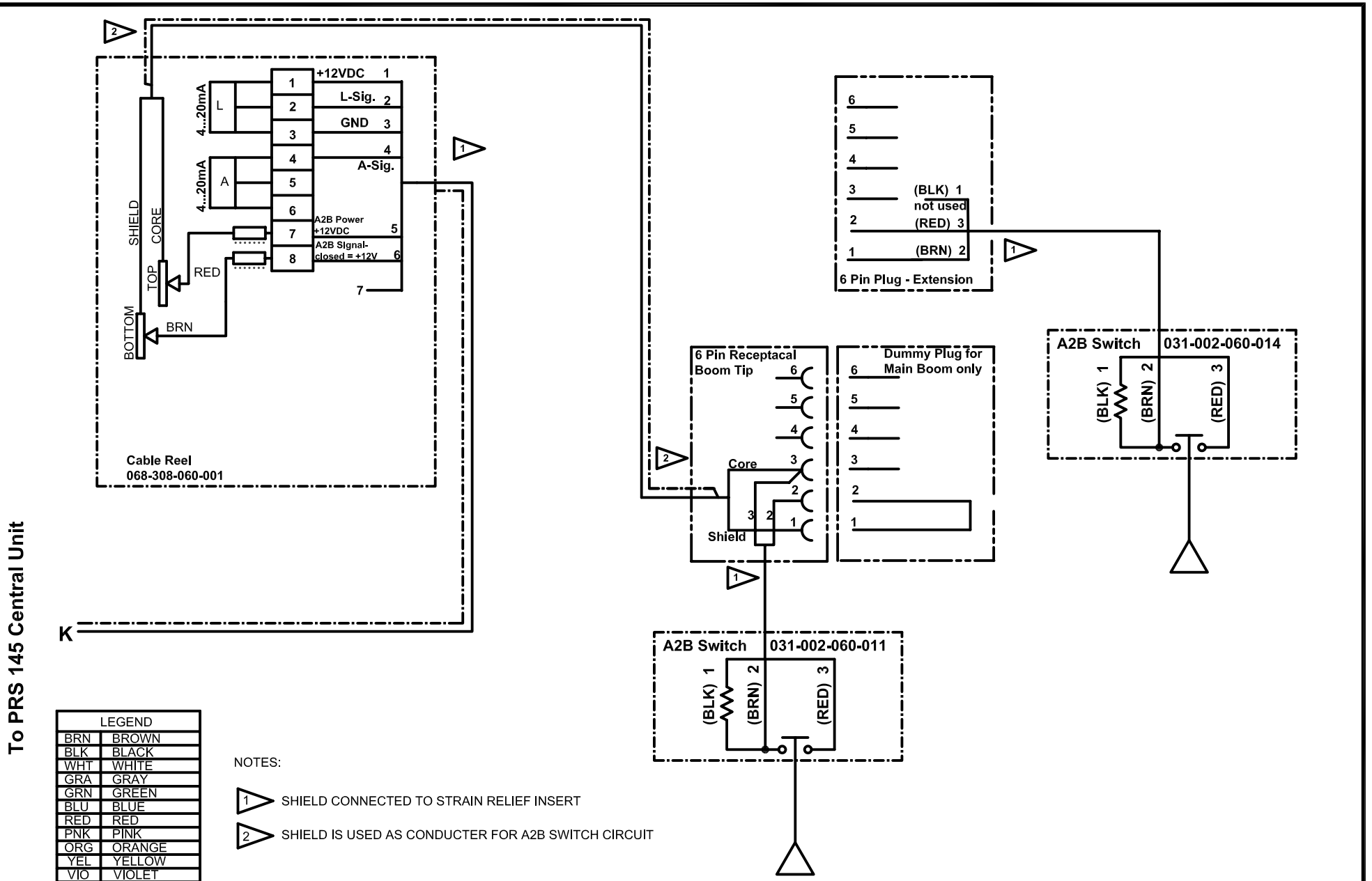

LEGEND	
BRN	BROWN
BLK	BLACK
WHT	WHITE
GRA	GRAY
GRN	GREEN
BLU	BLUE
RED	RED
PNK	PINK
ORG	ORANGE
YEL	YELLOW
VIO	VIOLET
SHD	SHIELD
CRE	CREAM
IS	INNER SHIELD
SS	SINGLE SHIELDED
DS	DOUBLE SHIELDED
NC	NOT CONNECTED

NOTES:

1. SHIELD CONNECTED TO STRAIN RELIEF INSERT
2. SHIELD IS USED AS CONDUCTER FOR A2B SWITCH CIRCUIT

PAT AMERICA, Inc.
1665 ORCHARD DRIVE
CHAMBERSBURG, PA 17201

PRS 145 w/ LWG 308 & KST P-Transducers

GENERAL TOLERANCES

P/N 031-300-101-xxx

REV	ECN	DESCRIPTION	BY	APV	DATE

DRAWN WB DATE 09/29/2003
APPROVED DATE
SCALE: SHEET: 2 of 4
SIZE A DWG NO. REV
ECN
C.A.G.E. 79760

PAT America Inc. reserves proprietary rights to this drawing and to the data shown thereon. The drawing and data are confidential and are not to be used or reproduced without the written consent of PAT America Inc. This drawing is subject to technical modification without prior notice.

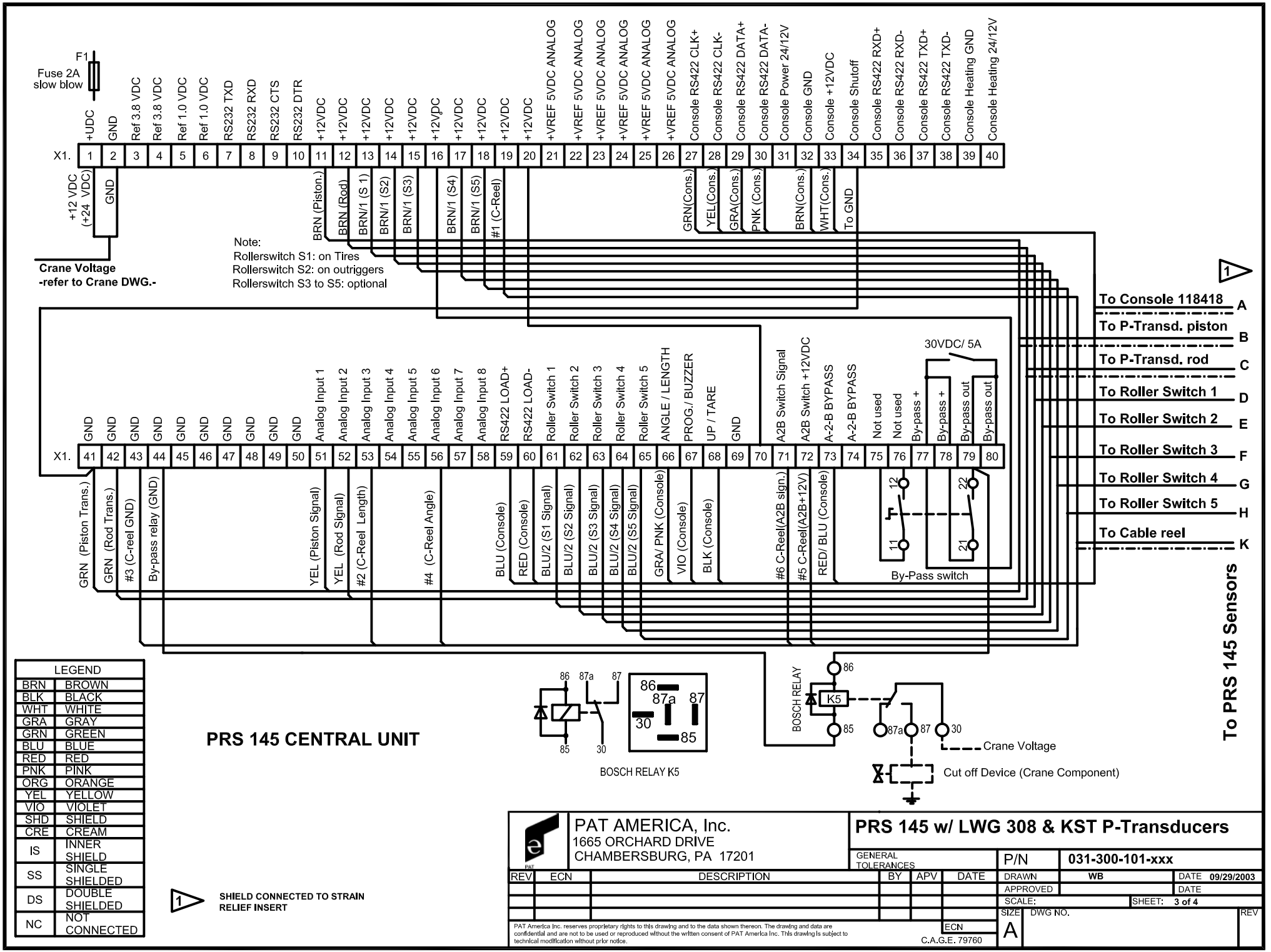
F1
Fuse 2A
slow blow
+UDC
GND
Ref 3.8 VDC
Ref 3.8 VDC
Ref 1.0 VDC
Ref 1.0 VDC
RS232 TXD
RS232 RXD
RS232 CTS
RS232 DTR
+12VDC
+12VDC
+12VDC
+12VDC
+12VDC
+12VDC
+12VDC
+12VDC
+12VDC
+VREF 5VDC ANALOG
+VREF 5VDC ANALOG
+VREF 5VDC ANALOG
+VREF 5VDC ANALOG
+VREF 5VDC ANALOG
+VREF 5VDC ANALOG
Console RS422 CLK+
Console RS422 CLK-
Console RS422 DATA+
Console RS422 DATA-
Console Power 24/12V
Console GND
Console +12VDC
Console Shutoff
Console RS422 RXD+
Console RS422 RXD-
Console RS422 TXD+
Console RS422 TXD-
Console Heating GND
Console Heating 24/12V
X1.
1 2 3 4 5 6 7 8 9 10 11 12 13 14 15 16 17 18 19 20 21 22 23 24 25 26 27 28 29 30 31 32 33 34 35 36 37 38 39 40
+12 VDC (+24 VDC)
GND
Crane Voltage
-refer to Crane DWG.-
BRN (Piston.)
BRN (Rod)
BRN/1 (S 1)
BRN/1 (S2)
BRN/1 (S3)
BRN/1 (S4)
BRN/1 (S5)
#1 (C-Reel)
GRN(Cons.)
YEL(Cons.)
GRA(Cons.)
PNK (Cons.)
BRN(Cons.)
WHT(Cons.)
To GND
Note:
Rollerswitch S1: on Tires
Rollerswitch S2: on outriggers
Rollerswitch S3 to S5: optional
1
To Console 118418 A
To P-Transd. piston B
To P-Transd. rod C
To Roller Switch 1 D
To Roller Switch 2 E
To Roller Switch 3 F
To Roller Switch 4 G
To Roller Switch 5 H
To Cable reel K
30VDC/ 5A
GND
GND
GND
GND
GND
GND
GND
GND
GND
GND
Analog Input 1
Analog Input 2
Analog Input 3
Analog Input 4
Analog Input 5
Analog Input 6
Analog Input 7
Analog Input 8
RS422 LOAD+
RS422 LOAD-
Roller Switch 1
Roller Switch 2
Roller Switch 3
Roller Switch 4
Roller Switch 5
ANGLE / LENGTH
PROG./ BUZZER
UP / TARE
GND
A2B Switch Signal
A2B Switch +12VDC
A-2-B BYPASS
A-2-B BYPASS
Not used
Not used
By-pass +
By-pass +
By-pass out
By-pass out
X1.
41 42 43 44 45 46 47 48 49 50 51 52 53 54 55 56 57 58 59 60 61 62 63 64 65 66 67 68 69 70 71 72 73 74 75 76 77 78 79 80
GRN (Piston Trans.)
GRN (Rod Trans.)
#3 (C-reel GND)
By-pass relay (GND)
YEL (Piston Signal)
YEL (Rod Signal)
#2 (C-Reel Length)
#4 (C-Reel Angle)
BLU (Console)
RED (Console)
BLU/2 (S1 Signal)
BLU/2 (S2 Signal)
BLU/2 (S3 Signal)
BLU/2 (S4 Signal)
BLU/2 (S5 Signal)
GRA/ PNK (Console)
VIO (Console)
BLK (Console)
#6 C-Reel(A2B sign.)
#5 C-Reel(A2B+12V)
RED/ BLU (Console)
12
11
22
21
By-Pass switch
To PRS 145 Sensors
LEGEND
BRN BROWN
BLK BLACK
WHT WHITE
GRA GRAY
GRN GREEN
BLU BLUE
RED RED
PNK PINK
ORG ORANGE
YEL YELLOW
VIO VIOLET
SHD SHIELD
CRE CREAM
IS INNER SHIELD
SS SINGLE SHIELDED
DS DOUBLE SHIELDED
NC NOT CONNECTED
PRS 145 CENTRAL UNIT
86 87a 87 30 85
BOSCH RELAY K5
BOSCH RELAY
K5
86 85 87a 87 30
Crane Voltage
Cut off Device (Crane Component)
1 SHIELD CONNECTED TO STRAIN RELIEF INSERT
PAT AMERICA, Inc.
1665 ORCHARD DRIVE
CHAMBERSBURG, PA 17201
PRS 145 w/ LWG 308 & KST P-Transducers
GENERAL TOLERANCES
P/N 031-300-101-xxx
REV ECN DESCRIPTION BY APV DATE
DRAWN WB DATE 09/29/2003
APPROVED DATE
SCALE: SHEET: 3 of 4
SIZE A DWG NO. REV
ECN
C.A.G.E. 79760
PAT America Inc. reserves proprietary rights to this drawing and to the data shown thereon. The drawing and data are confidential and are not to be used or reproduced without the written consent of PAT America Inc. This drawing is subject to technical modification without prior notice.

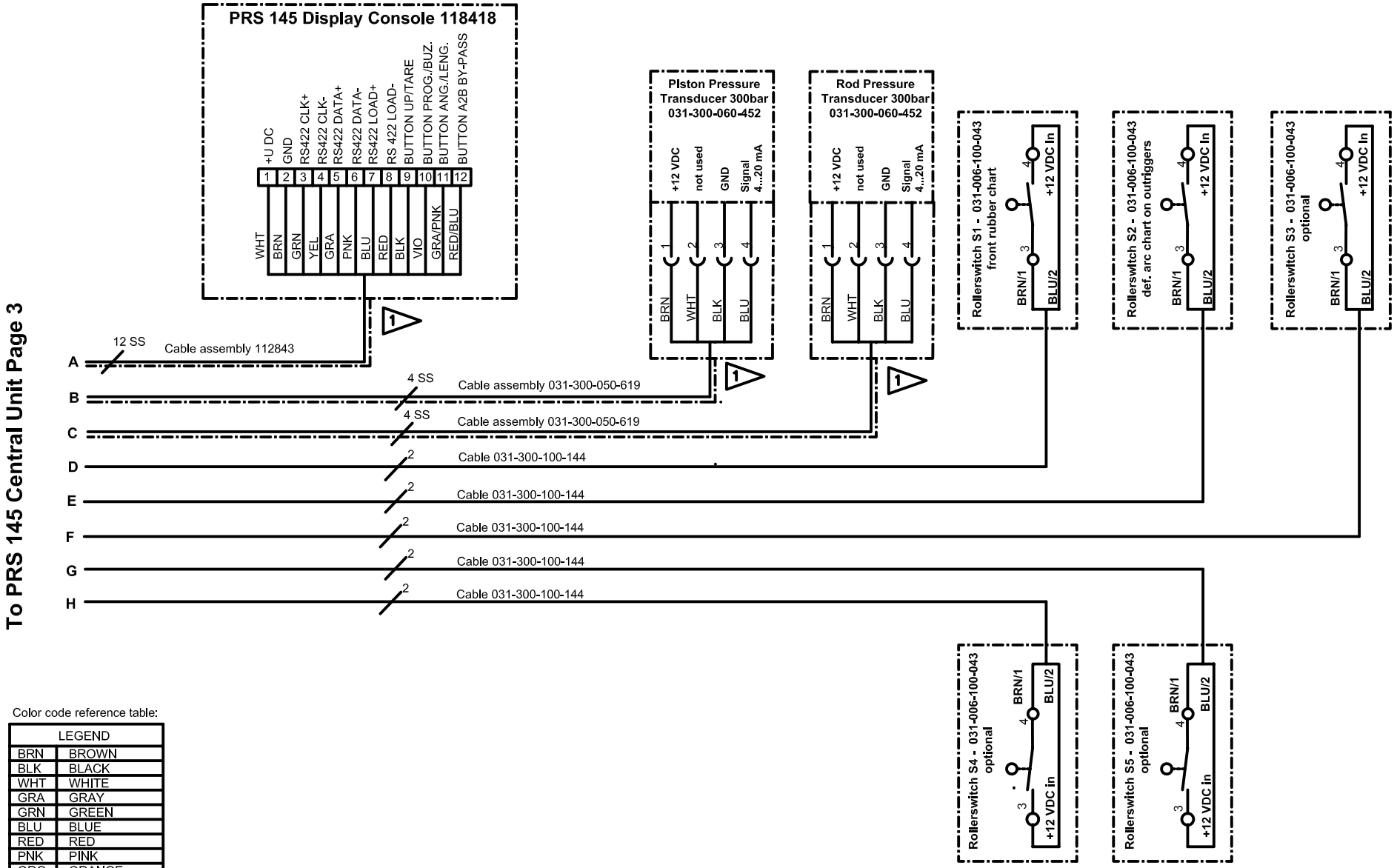

Color code reference table:

LEGEND	
BRN	BROWN
BLK	BLACK
WHT	WHITE
GRA	GRAY
GRN	GREEN
BLU	BLUE
RED	RED
PNK	PINK
ORG	ORANGE
YEL	YELLOW
VIO	VIOLET
SHD	SHIELD
CRE	CREAM
IS	INNER SHIELD
SS	SINGLE SHIELDED
DS	DOUBLE SHIELDED
NC	NOT CONNECTED

Notes:

1 Shield connected to strain relief insert

PAT AMERICA, Inc.
1665 ORCHARD DRIVE
CHAMBERSBURG, PA 17201

PRS 145 w/ 4-20mA output sensors - KIT 1492

GENERAL TOLERANCES

P/N **031-300-101-492**

REV	ECN	DESCRIPTION	BY	APV	DATE

DRAWN WB DATE 09/28/2003
APPROVED DATE
SCALE: SHEET: 1 of 4
SIZE A DWG NO. REV
ECN
C.A.G.E. 79760

PAT America Inc. reserves proprietary rights to this drawing and to the data shown thereon. The drawing and data are confidential and are not to be used or reproduced without the written consent of PAT America Inc. This drawing is subject to technical modification without prior notice.

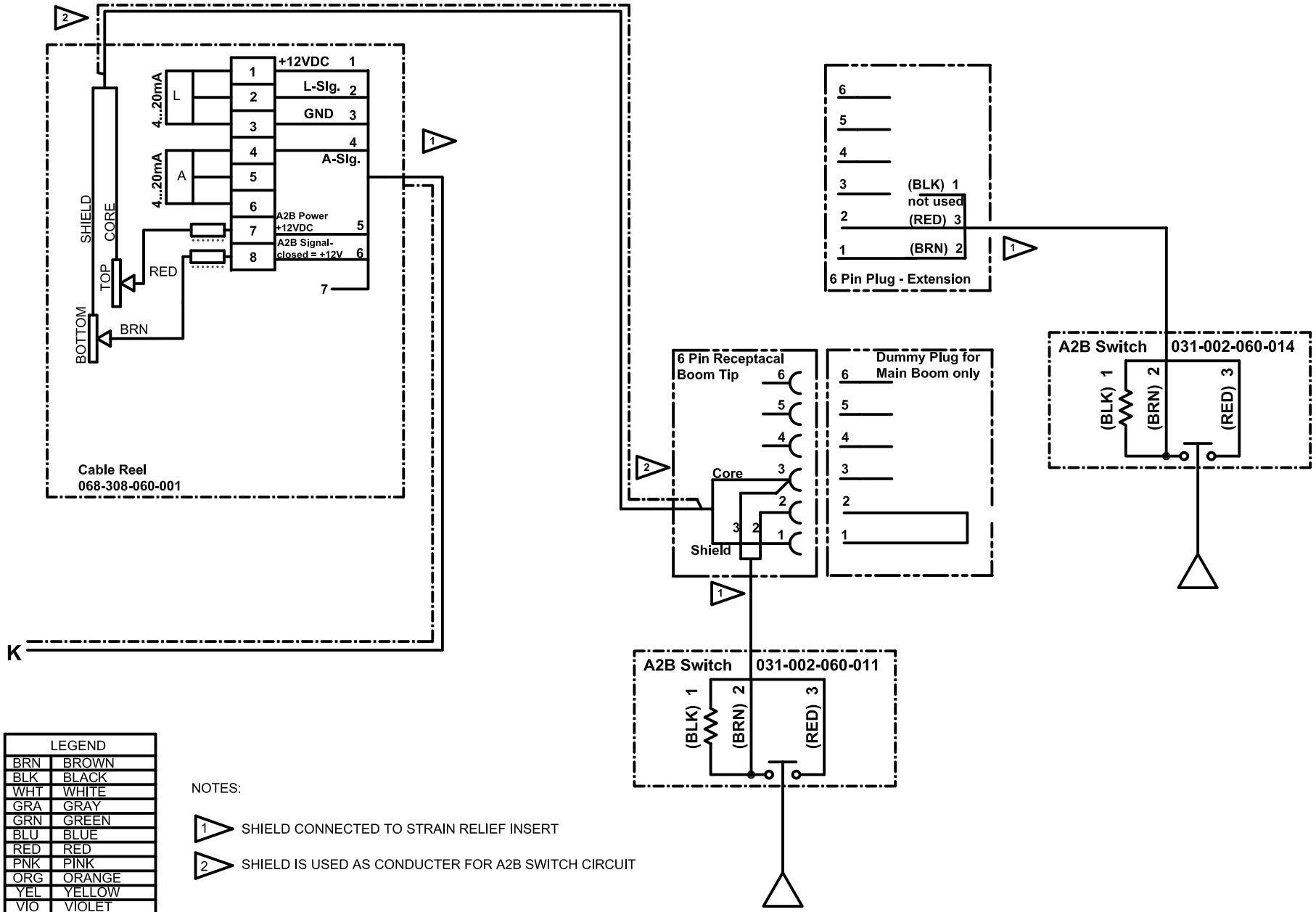

LEGEND	
BRN	BROWN
BLK	BLACK
WHT	WHITE
GRA	GRAY
GRN	GREEN
BLU	BLUE
RED	RED
PNK	PINK
ORG	ORANGE
YEL	YELLOW
VIO	VIOLET
SHD	SHIELD
CRE	CREAM
IS	INNER SHIELD
SS	SINGLE SHIELDED
DS	DOUBLE SHIELDED
NC	NOT CONNECTED

NOTES:

1. SHIELD CONNECTED TO STRAIN RELIEF INSERT
2. SHIELD IS USED AS CONDUCTER FOR A2B SWITCH CIRCUIT

PAT AMERICA, Inc.
1665 ORCHARD DRIVE
CHAMBERSBURG, PA 17201

PRS 145 w/ 4-20mA output sensors - KIT 1492

GENERAL TOLERANCES

P/N **031-300-101-492**

REV	ECN	DESCRIPTION	BY	APV	DATE

DRAWN WB DATE 09/29/2003
APPROVED DATE
SCALE:
SHEET: 2 of 4 SHEET
SIZE A DWG NO. REV
ECN
C.A.G.E. 79760

PAT America Inc. reserves proprietary rights to this drawing and to the data shown thereon. The drawing and data are confidential and are not to be used or reproduced without the written consent of PAT America Inc. This drawing is subject to technical modification without prior notice.

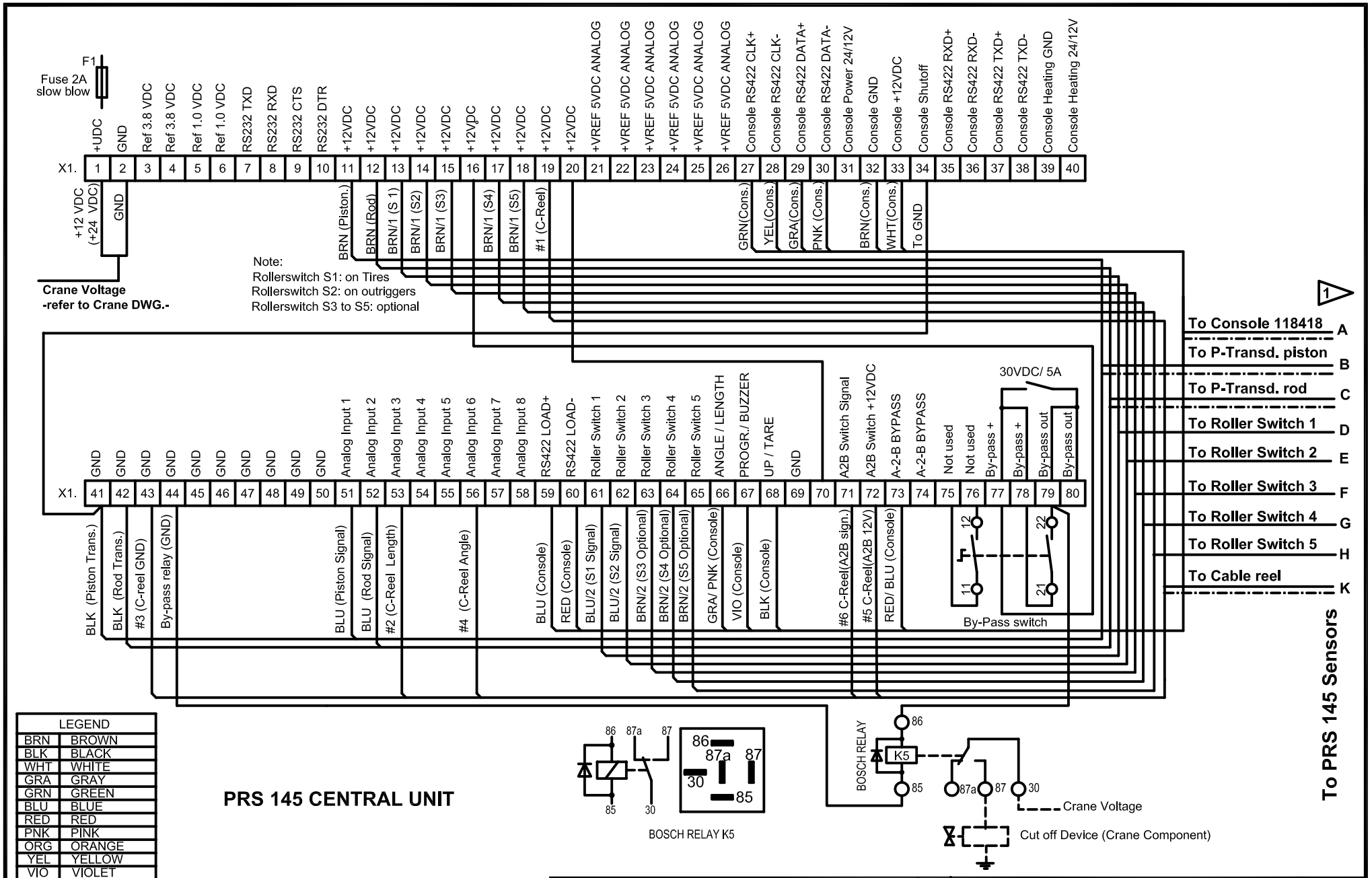

PRS 145 CENTRAL UNIT

LEGEND	
BRN	BROWN
BLK	BLACK
WHT	WHITE
GRA	GRAY
GRN	GREEN
BLU	BLUE
RED	RED
PNK	PINK
ORG	ORANGE
YEL	YELLOW
VIO	VIOLET
SHD	SHIELD
CRE	CREAM
IS	INNER SHIELD
SS	SINGLE SHIELDED
DS	DOUBLE SHIELDED
NC	NOT CONNECTED

1 SHIELD CONNECTED TO STRAIN RELIEF INSERT

PAT AMERICA, Inc.
1665 ORCHARD DRIVE
CHAMBERSBURG, PA 17201

PRS 145 w/ 4-20mA output sensors - KIT 1492

GENERAL TOLERANCES

P/N **031-300-101-492**

REV	ECN	DESCRIPTION	BY	APV	DATE

DRAWN WB DATE 09/28/2003
APPROVED DATE
SCALE: SHEET: 3 of 4
SIZE A DWG NO. REV
ECN
C.A.G.E. 79760

PAT America Inc. reserves proprietary rights to this drawing and to the data shown thereon. The drawing and data are confidential and are not to be used or reproduced without the written consent of PAT America Inc. This drawing is subject to technical modification without prior notice.

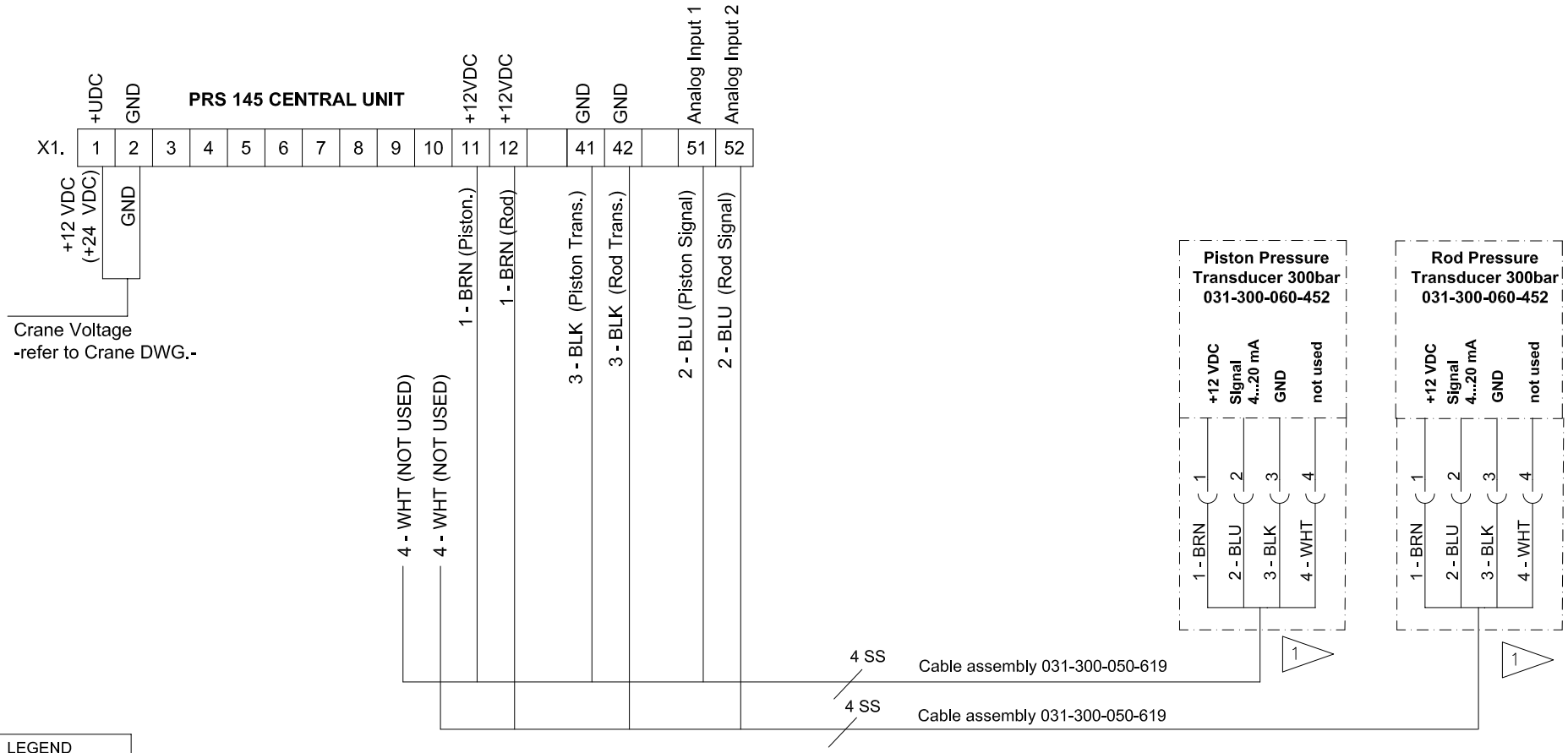

LEGEND	
BRN	BROWN
BLK	BLACK
WHT	WHITE
GRA	GRAY
GRN	GREEN
BLU	BLUE
RED	RED
PNK	PINK
ORG	ORANGE
YEL	YELLOW
VIO	VIOLET
SHD	SHIELD
CRE	CREAM
IS	INNER SHIELD
SS	SINGLE SHIELDED
DS	DOUBLE SHIELDED
NC	NOT CONNECTED

1 SHIELD CONNECTED TO STRAIN RELIEF INSERT

PAT AMERICA, Inc.
1665 ORCHARD DRIVE
CHAMBERSBURG, PA 17201

PRS 145 (PRESSURE TRANSDUCER WIRING) - 1492

GENERAL TOLERANCES

P/N 031-300-101-492

REV	ECN	DESCRIPTION	BY	APV	DATE

DRAWN SB DATE 02/25/2005
APPROVED DATE
SCALE: SHEET: 1 of 1
SIZE A DWG NO. REV
ECN
C.A.G.E. 79760

PAT America Inc. reserves proprietary rights to this drawing and to the data shown thereon. The drawing and data are confidential and are not to be used or reproduced without the written consent of PAT America Inc. This drawing is subject to technical modification without prior notice.

www.skyazul.com

SkyAzúl, Inc.
16 Walnut Street
Middletown, MD 21769
Phone 301-371-6126
Fax 301-371-0029
info@skyazul.com